引进 创新 超越
IMPORTING INNOVATION EXCELLING

宁波威克斯液压有限公司
NINGBO VICKS HYDRAULIC CO.,LTD.

地址：浙江省宁波市奉化区溪口镇后旺南路一号
Add: No.1, South Houwang Road, Xikou Zone, Fenghua, Ningbo, Zhejiang, China

公司总部/Domestic Sales：
Tel: 86-574-88901118 88900002
Fax: 86-574-88900007
Email: vicksxia@163.com
Http://www.nvicks.cn

国际业务部/International Sales：
Tel: 86-574-88876506
Fax: 86-574-88876505
Email: sales@hydnvicks.com

美国分公司：
地址：加利福尼亚州洛杉矶喜瑞都制鞋大道16300号
邮编：CA 90703
电话：909-594-1683

广东分公司：
东莞办地址：东莞寮步上屯良平西路142号
江门办地址：广东省江门鹤山市桃源镇桃源大道341号厂房三楼 (农商银行对面)
电话：0769-81101311
传真：0769-89610893

福建分公司：
地址：晋江市安海镇可慕恒安生活区2号楼104
电话：0595-85668821
传真：0595-85668821

成都分公司：
地址：成都市青白江区青江中路318号8栋1801
电话：18428160062

让天更蓝
Let The Sky Bluer

高压内啮合齿轮泵
HIGH PRESSURE INTERNAL GEAR PUMPS
伺服成套解决方案
COMPLETE SERVO SOLUTION

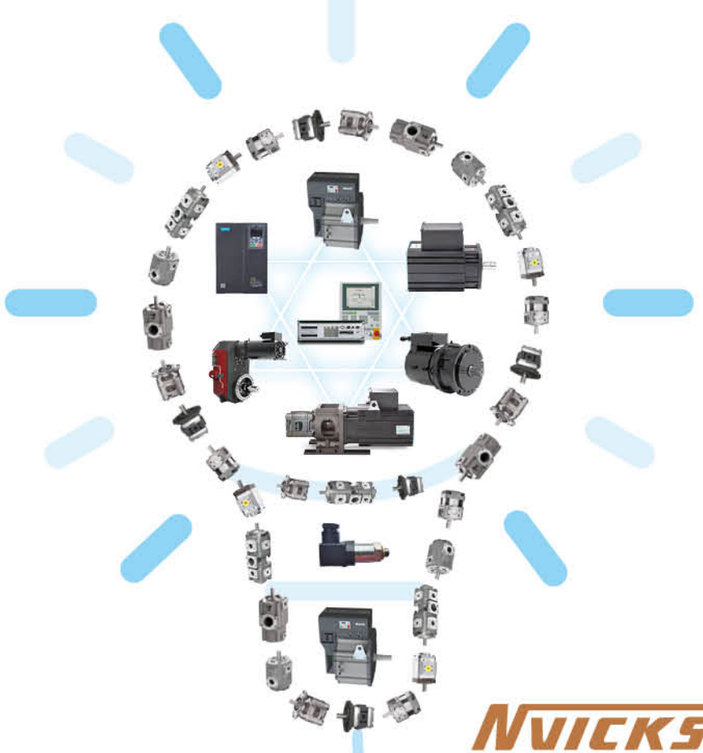

NVICKS® 威克斯液压 VICKS HYDRAULIC

工厂实景/Factory Live-action

关于我们

宁波威克斯液压有限公司是上市公司鲍斯股份（股份代码：300441）控股子公司，创始于2007年，是一家拥有多项发明专利的国家高新技术企业，现有10条世界领先的液压泵生产检测流水线。年产液压泵15万多台，节能伺服系统1万多套，提供节能电储料成套解决方案（直驱、行星减速机、齿轮箱）。

公司是叶片泵行业新标准修订主持单位，工信部专精特新“小巨人”企业；荣获中国液气密行业技术进步二等奖、区长质量奖和国家创新基金项目支持。

公司拥有VG系列超高压内啮合齿轮泵最高压力40Mpa、最高转速4000r/min，排量范围3-320ml/r，世界首创ABT系列伺服叶片泵，T6、T7、V、VQ、V10、V20、SQP、PV2R叶片泵，M3B、M4C、M4D、M4E、25/26M、35/36M、45/46M、50/51M叶片马达的核心技术。产品通过中国CCS、挪威DNV、美国ABS、法国BV、英国LR、日本NKK等世界六大权威船级社认证，广泛应用在注塑橡塑、压铸、工程、船舶、农机、油压、打包、港口等机械行业。

公司是台湾台达、奥地利KEBA、菲仕电机、韵升股份、美的集团、日本住友的战略合作伙伴。

公司坚持引进、创新、超越的发展之路和优质、高效、低耗、安全的经营理念，致力于打造世界著名的液压泵制造商及伺服节能成套解决方案专家，为装备升级造“中国心脏”。

公司以学习、和谐、坚持、专业为企业文化的核心思想，倡导至真、至善、至美的价值观和开明开拓、和谐和乐的精神。


办公区/Office


科研中心/Scientific Research Centre

ABOUT US

Ningbo Vicks Hydraulic Co., Ltd. is a holding subsidiary of the listed company Baosi Stock (stock code: 300441). It is founded in 2007. It is a national high-tech enterprise with a number of invention patents. There are 10 world leading production and testing lines for hydraulic pumps. With an annual output of more than 150,000 pcs hydraulic pumps, more than 10,000 sets energy-saving servo system, and supply complete solutions for electric melt glue energy-saving. (DD motor, Planetary reducer, Gearbox).

The company is the host of the revision of the new standard of the vane pump industry, praised by the Ministry of Industry and Information Technology as the new title "Little Giant" enterprise. We won the second prize of technology progress by China Hydraulics Pneumatics & Seals Association. Also we got the district mayor's quality award and the National Innovation Fund project support.

The company has core technology of VG series high pressure internal gear pumps (Max.Pressure 40Mpa, Max. Speed 4000r/min and Discharge range 3-320ml/r), World-first ABT series servo vane pumps, T6, T7, V, VQ, V10, V20, SQP, PV2R series vane pumps and M3B, M4C, M4D, M4E, 25/26M, 35/36M, 45/46M, 50/51M series vane motors. Our products are certified by the world's top six authoritative classification societies such as Chinese CCS, Norway DNV, American ABS, French BV, British LS and Japan NKK, and are widely used in injection molding, die-casting, engineering, ships, agricultural machinery, hydraulic, packaging, ports and other machinery industries.

The company is strategic partner of Taiwan DELTA, Austria KEBA, PHASE motor, Yunsheng Group, Midea Group and SUMITOMO Pump.

Ningbo Vicks adheres to the development path of introduction, innovation and transcendence, and the business philosophy of high quality, high efficiency, low power consumption and safety, and is committed to building a world-renowned hydraulic pump manufacturer and servo energy-saving complete solution expert. We want to make a "Chinese heart" for industrial equipment upgrades.

The company takes learning, harmony, persistence and professionalism as the core ideas of enterprise culture, and advocates the values of truth, goodness and beauty as well as the spirit of open exploration, harmony and joy.


生活区/Staff Living Area


活动中心/Activity Center

高速·高压·节能
High Speed · High Voltage · Energy Saving

BSC 股票代码
鲍斯股份 300441

内啮合齿轮泵·伺服系统
Internal Gear Pump　Servo system

叶片(伺服)泵·叶片马达
Vane(Servo) Pump　Vane Motor

电储料成套解决方案
Complete Set Of Solutions For Electrical Storage Materials

NVICKS® 威克斯液压 VICKS HYDRAULIC

Strategic Cooperative
战略合作

- 台湾台达
- 奥地利科霸
- 菲仕电机
- 韵升集团 YUNSHENG GROUP
- 美的
- 日本住友
- 台湾传仕重工
- 美国艾伯特(ABT)流体动力
- China Shipbuilding 中船重工
- 中联重科 ZOOMLION
- 美国卡特彼勒
- 法因股份
- HAITIAN Drive Systems
- 力勁集團 L.K. GROUP
- Golden Eagle Stock 金鹰股份
- 博创智能装备
- 佳明机器
- 宝捷精机 PowerJet
- 联升精密
- 拓斯达
- 甬华
- 台意德塑机
- 乐星机械
- 通佳
- 博纳机械 BONA MACHINERY
- 德力士
- 伟达智能
- 晋江火炬油压机械
- 成都正西
- 鹏达液压
- 江东机械
- 华德液压
- 新佳盛
- 梁发记
- 康思达

电储料成套解决方案

Complete Set Of Solutions For Electrical Storage Materials

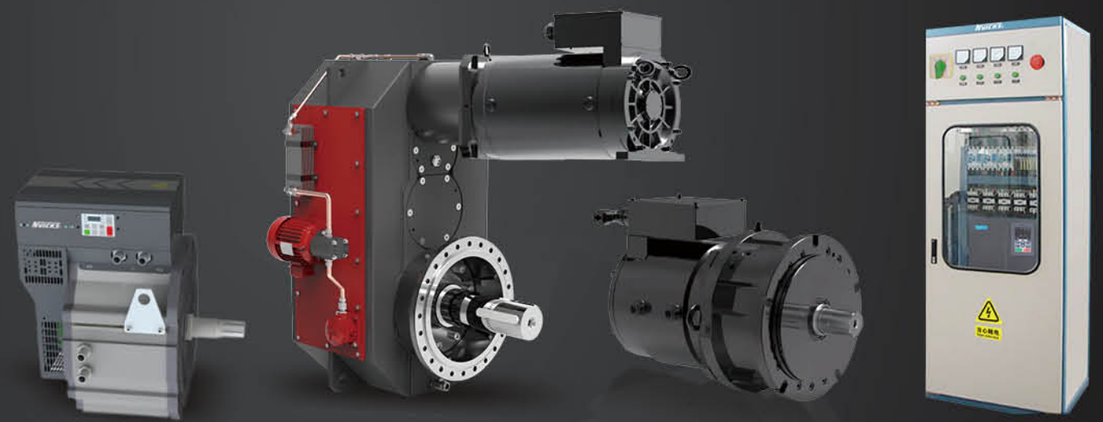

直驱 驱控一体机
Direct drive drive control integrated machine

变速箱伺服一体机
Gearbox servo integrated machine

行星伺服一体机
Planetary servo integrated machine

一体式控制柜
Integrated control cabinet

*详细资料请咨询公司工程技术人员

*Please consult the company's engineering and technical personnel for detailed information

Certification/ Honorary Certificate

认证/荣誉证书

科研合作高校/Cooperation of colleges

船级社认证 / Classification society certification

挪威 / Norwegian DNV

美国 / American ABS

法国 / French BV

中国 / China CCS

英国 / British LR

日本 / Japan NKK

Production Workshop

生产车间

数控曲线、槽磨床生产线 / CNC Machines, groove grinding machine production line

日本牧野CNC生产线 / Japan Makino CNC production line

瑞士费尔曼CNC生产线 / Swiss Fehlmann CNC production line

Key Equipment

关键设备

英国霍洛伊德涡旋磨床 / British HOLROYD Scroll grinder

德国卡帕涡旋磨齿机 / Germany Scroll gear grinding machine

日本马扎克机床
Japan Mazak CNC

奥地利WFL车铣复合加工中心
Austria WFL Turn milling compound machining center

韩国AM公司双端面磨床
Korea AM Paralled Surface Grinding Machine

400KN数控拉床
40KN CNC broaching machine

日本津上数控外圆磨床
Japan TSUGAMI CNC cylindrical grinder

数控滚齿机
CNC hobbing machine

Testing Equipment
检测设备

德国蔡司三座标测量仪
Germany ZEISS 3D Coordinate Instrument

美国海克斯康三座标测量仪
America Hexagon 3D Coordinate Instrument

德国克林贝格齿轮测量中心
Germany KLINGELNBERG Gear measuring center

全自动影像测量仪
Automatic image measuring instrument


德国蔡司金相显微镜
Germany ZEISS metallographic microscope


伺服泵全自动测试平台
Servo pump automatic test bench


电机功率250KW 转速3000r/min 超大功率叶片泵全自动测试平台
Full automatic testing bench for vane pump with 250KW motor power and 3000R/M speed

伺服泵全自动测试平台 / Servo pump automatic test bench

CONTENTS
目 录

VG 系列齿轮泵 Series Gear Pump



VG系列齿轮泵是我司与美国艾伯特流体动力有限公司（宁波威克斯液压有限公司全资子公司，简称ABT）、浙江大学合作共同研发的高性能内啮合齿轮泵，引入德国齿轮泵技术的基础上加以改良，并引进了一批国外先进的生产和检测设备，全力打造的一款高压、低噪音和低脉动的齿轮泵。

本产品我公司拥有自主知识产权并获得国家创新基金支持，广泛应用于橡塑、压铸、鞋革、锻压、挤压、折弯、剪板机械等伺服液压系统中。

VG series gear pumps are developed by our company and American Albert Fluid Power Co., LTD. (Ningbo Vicks Hydraulic Co.,LTD., a wholly owned subsidiary; short for ABT) , cooperated with Zhejiang University . They're high performance internal gear pumps. The technology on the basis of the introduction of Germany to be improved,and we introduced a number of foreign advanced production and testing equipments, to make a pump of high pressure, low noise and low pulse.
Our company has independent intellectual property rights and National Innovation Fund support, widely used in rubber and plastic, die casting, shoe leather, forging, extrusion, bending, plate Shearing machinery and other servo hydraulic system.

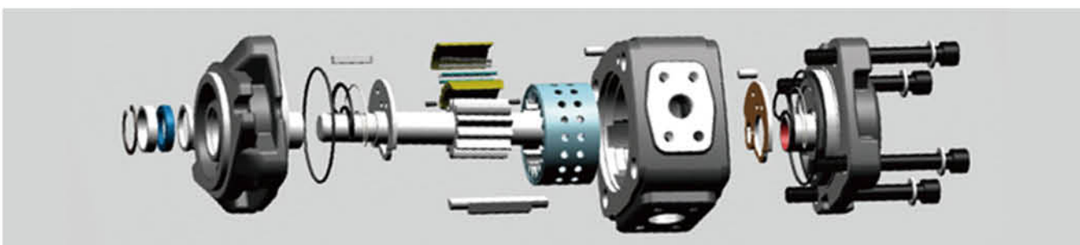

其主要特点/Main Features

- 采用轴向和径向压力补偿设计，即使在低转速和低粘度下仍保持较高的容积效率。
- 超低的噪音，采用高强度铸铁和内部独特的消音设计，使噪音更低。
- 极低的流量和压力脉动，在低速状况仍可保持稳定的流量和压力输出。
- 高压力设计，最高使用压力可达到35MPa
- 转速范围宽广，最高转速可达3000r/min
- 可任意进行组合形成双联泵。
- 对油液污染不敏感，使用寿命长。
- 可广泛适用于工业，如塑机、鞋机、压铸机械以及叉车等行业的液压系统，尤其适用于伺服变频驱动的节能系统。

- Adopting axial and radial pressure compensation design to maintain high volumetric efficiency even at low speed and low viscosity.
- Ultra-low noise, using high-strength cast iron and a unique internal noise reduction design, make the noise lower.
- Very low flow and pressure pulsation, stable flow and pressure output can still be maintained at low speeds.
- High pressure design, the maximum working pressure can reach 35MPa
- Wide speed range, the highest speed can reach 3000r/min
- Can be combined arbitrarily to form a double pump.
- It is not sensitive to oil pollution and has a long service life.
- It can be widely applied to hydraulic systems in industries such as plastic machines, shoe machines, die-casting machinery and forklifts, and is especially suitable for energy-saving systems driven by servo inverters.

VG 系列齿轮泵 Series Gear Pump

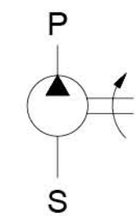

液压符号
Hydraulic Sign

内啮合齿轮泵原理图/Principle Diagram of Gear Pump

VG 型液压泵是具有固定排量的间隙补偿内啮合齿轮泵。

其基本构成是：安装前盖 (1)，泵体 (2)，后盖 (3)，外齿轴 (4)，内齿圈 (5)，滑动轴承 (6)，配油盘 (7) 和定位杆 (8)，以及由月牙副板 (9)，月牙主板 (10) 和密封棒 (11) 组成 .

The VG hydraulic pump is a backlash compensation internal gear pump with a fixed displacement.
Its basic structure is: install front cover (1), pump body (2), rear cover (3), outer gear shaft (4), inner gear ring (5), sliding bearing (6), oil distribution plate (7) And positioning rod (8), and consist of crescent sub-board (9), crescent main board (10) and sealing rod (11)

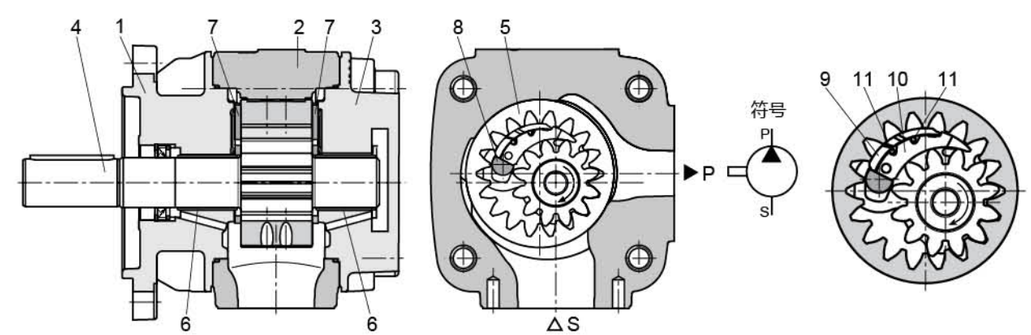

吸油和排油过程 /Suction and discharge process

根据流体动力学安装的外齿轴（4）按所示旋转方向传动内齿圈（5）。

通过在吸油区域中打开的齿侧间隙来加注油液。油液通过外齿轴和内齿圈之间的齿侧间隙从吸油区域（S）输送到压力区域（P）。

由此，油液从闭合的齿侧间隙排出并输送到压力油口（P）。吸油区域和排放区域由径向补偿元件（9 至 11）以及内齿圈和外齿轮之间的齿轮啮合分隔开。

The external gear shaft (4) installed according to fluid dynamics drives the internal gear ring (5) in the direction of rotation shown. Fill the oil through the tooth gap opened in the oil suction area. The oil is transported from the oil suction area (S) to the pressure area (P) through the side clearance between the outer gear shaft and the inner gear ring. As a result, the oil is discharged from the closed tooth gap and delivered to the pressure oil port (P). The oil suction area and the discharge area are separated by the radial compensation element (9 to 11) and the gear mesh between the inner ring gear and the outer gear.

轴向补偿结构 /Axial compensation

压力区域中的排放室由配油盘（7）进行轴向密封。配油盘背对排放区域的一侧受压力场（12）的背压。这些压力场使配油盘与排放区域达到平衡，从而以较低的机械损失实现理想的密封效果。

The discharge chamber in the pressure zone is axially sealed by the oil distribution plate (7). The oil distribution pan faces away from the discharge area one side is back pressured by the pressure field (12). These pressure fields make the oil distribution plate and the discharge area reach a balance, from the ideal sealing effect is achieved with lower mechanical loss.

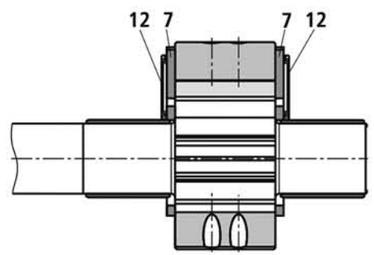

径向补偿结构 /Radial compensation

径向补偿元件包括月牙副板（9），月牙主板（10）和密封棒（11）。其中月牙主板（10）紧贴外齿轴齿顶圆曲面，月牙副板（9）紧贴内齿圈齿顶圆曲面，定位杆用来限制月牙板圆周方向的运动。

这样可通过自动间隙调整将压力区域与吸油区域分隔开。

这是在整个工作时间内持续保持高容积效率的先决条件。

The radial compensation element includes a crescent sub-plate (9), a crescent main plate (10) and a sealing rod (11). The crescent main plate (10) is closely attached to the round surface of the tooth tip of the outer gear shaft, the crescent sub-plate (9) is closely attached to the round surface of the tooth tip of the inner gear ring, and the positioning rod is used to restrict the movement of the crescent plate in the circumferential direction.

In this way, the pressure zone can be separated from the suction zone by automatic clearance adjustment. This is a prerequisite for maintaining high volumetric efficiency continuously throughout the working hours.

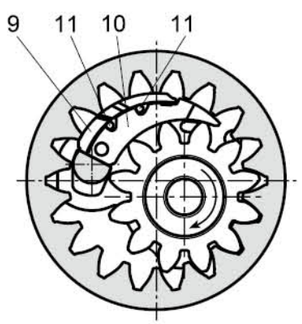

啮合 /Toothing

渐开线齿边的啮合具有用于较低流量和压力脉动的长啮合长度，因此可确保低噪音运行。

The toothing with involute flanks features a long meshing length for low flow and pressure pulsation and therefore ensures lownoise operation.

技术数据（使用时如果超出了规定的技术参数的范围，请务必向威克斯公司咨询！）

Technical data (if using is beyond the scope of the specified technical parameters, please be sure to consult Nvicks!)

概述 /Overview

设计 Design	内啮合齿轮泵，间隙补偿 Internal gear pump, clearance compensation
连接型式 Connection type	符合 ISO 3019-1 的 SAE 2 标准的 孔法兰 SAE 2 standard flanges to ISO 3019-1
管路连接 Pipeline connection	法兰油口 Oil Flange
轴负载 Shaft load	仅调整后的径向力和轴向力（例如皮带轮） Radial and axial forces only after adjustment (e.g., pulley)
旋转方向（从轴端查看） Rotation direction (viewed from shaft end)	顺时针或逆时针（应要求提供）- 并非双向旋转！ Clockwise or counterclockwise (available on request)- not bidirectional!

液压 /Hydraulic

液压油 Hydraulic oil		HLP - 符合 DIN 51524 第 2 部分的矿物油 HFC - 符合 DIN EN ISO 12922 [1) 2)] 的水性聚合物溶液：密封设计 W HEES - 符合 DIN ISO 15380 [1)] 的液压油 HFD-U - 符合 VDMA 24317 [1)]，DIN EN ISO 12922 [1)] 的液压油 HLP- Mineral oil conforming to DIN 51524 Part 2 HFC- Waterborne polymer solutions in accordance with DIN EN ISO 12922 [1) 2)]; Sealing design W HEES- Hydraulic oils according to DIN ISO 15380 [1)] HFD-U- Hydraulic fluid in accordance with VDMA 24317[1)], DIN EN ISO 12922 [1)]
液压油 Hydraulic oil	HLP 液压油 °C hydraulic oil	-10 至 +80；有关其它温度，请向我们咨询！ - 10 to + 80; For other temperature, please consult us!
	特殊液压油 °C Special hydraulic oil	-10 至 +50；有关其它温度，请向我们咨询！ - 10 to 50 +; For other temperatures, please consult us
环境温度范围 °C Ambient temperature range		-20 至 +60 -20 to +60
粘度范围 mm^2/s Viscosity range		10 至 300（至 n = 1800 min^{-1}） 10 至 100（至 n = 3000 min^{-1}） 2000 允许的启动粘度（400 至 1800 min^{-1}） 10 to 300（to n = 1800 min^{-1}） 10 to 100（to n = 3000 min^{-1}） 2000 Allowable starting viscosity (400 to 1800 min^{-1})
液压油最大允许污染度符合 ISO 4406 (c) 的清洁度等级 The maximum allowable contaminati on of hydraulic oil is in line with ISO Cleanliness grade of 4406 (c)		等级 20/18/15 [3)] Grade 20/18/15 [3)]

1）注意！
对于这些介质，针对特殊液压油的限制可以适用
2）液压油 HFC：输入速度 n 最大 = 2000 min^{-1}
3）在液压系统中必须遵循规定的组件清洁度等级。有效过滤能够避免发生故障，同时还可延长组件使用寿命。

1. Attention !
For these medium, restrictions on specific hydraulic oils may apply.
2. Hydraulic oil HFC: input speed n maximum =2000 min^{-1}
3. The specified component cleanliness level must be followed in the hydraulic system. Effective filtration can avoid failures and extend the service life of the components.

型号说明/Model Designation

VG1	-63	R	E	W	-A1
系列号 Series	排量 ml/r Displacement	旋转方向 Rotation	轴伸形式 Shaft type	密封材料 Sealing material	设计号 Design number
VGH0	003、004、005	从泵轴端看 Viewed from shaft end of pump R=顺时针旋转 Right hand for clockwise L=逆时针旋转 Left hand for counter-clockwise	K= 平键轴 Straight key shaft E= 平键轴 Straight key shaft R=SAE 花键轴 Spline shaft	W=丁晴橡胶 (Buna) NBR V=氟橡胶 (Viton) FKM	1K
VG0	8、10、13、16、20、25、28				A1
VG1	25、32、40、50、63 50H、63H				
VG2	80、100、125、145、160				

技术参数/Technical Data

系列号 Series	排量 ml/r Displacement	理论排量 ml/r Theory Displacement	额定压力 Mpa Rated Pressure	最高压力 Mpa Max.pressure	最高转速 r/min Max.speed	重量 kg Weight
VGH0	003	3	33	40	4200	4.6
	004	4				4.8
	005	5				4.8
VG0	8	8.2	31.5	35	3000	4.6
	10	10.2				4.8
	13	13.3				4.9
	16	16.0				5.2
	20	20.0	25	30		5.6
	25	24.0				6.0
	28	27.0				6.4
VG1	25	25.3	31.5	35		14.5
	32	32.7				15
	40	40.1				16
	50	50.7				17
	63	63.7	25	30		18.5
VG2	80	81.4	31.5	35		43.5
	100	100.2				45.5
	125	125.3				48
	145	145.2	25	28		50
	160	162.8	21	26		52

1500r/min 特性曲线/Characteristic curve

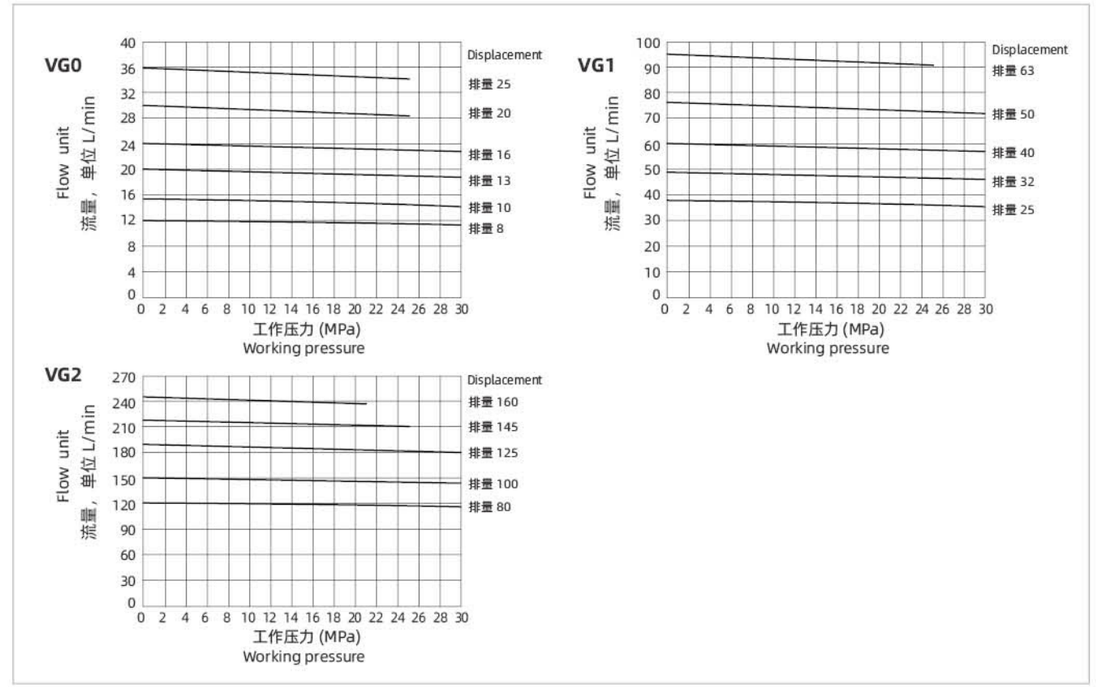

2000r/min 特性曲线/Characteristic curve

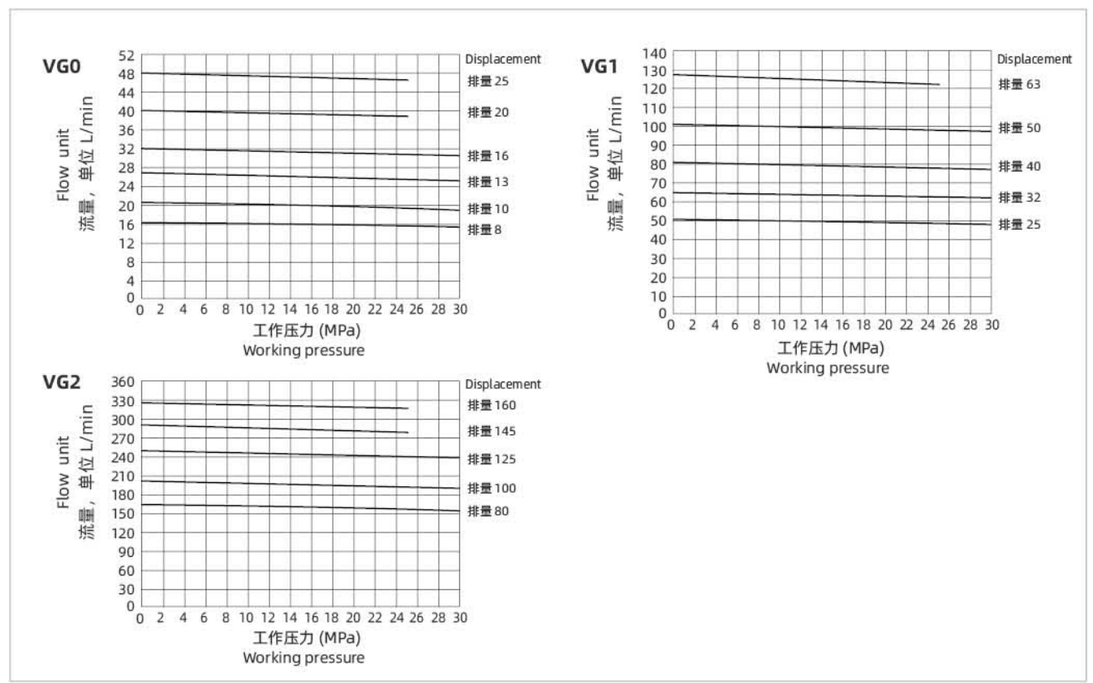

1500r/min 噪音曲线/Noise curve

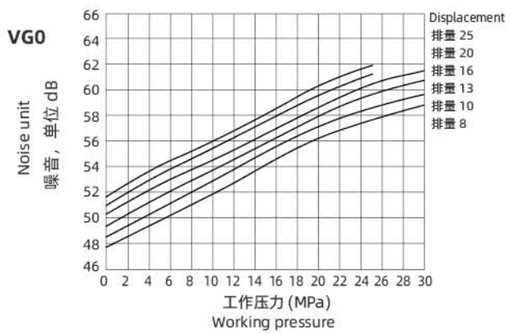

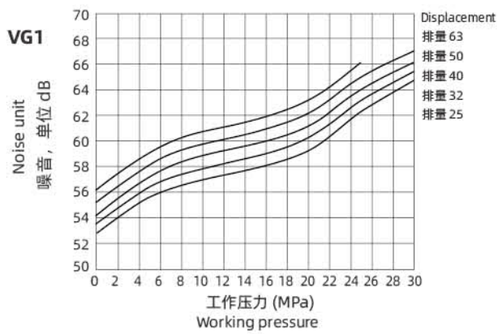

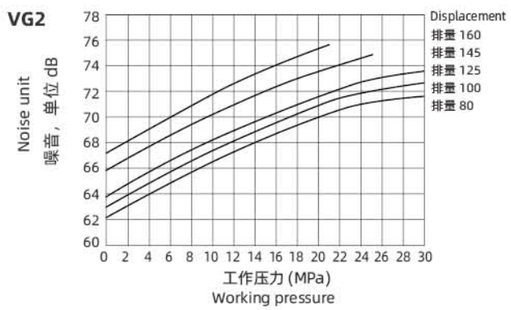

2000r/min 噪音曲线/Noise curve

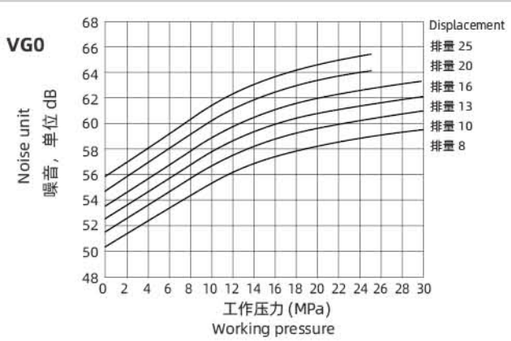

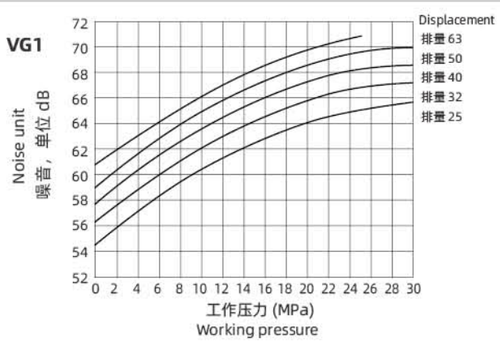

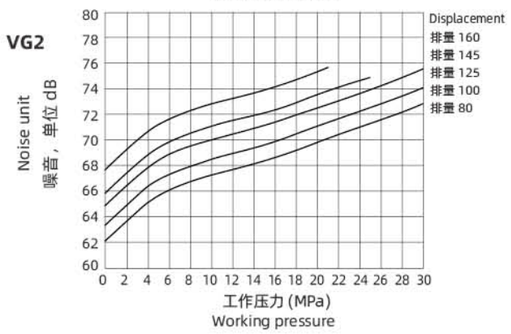

VGH0安装连接尺寸/Installation Dimensions

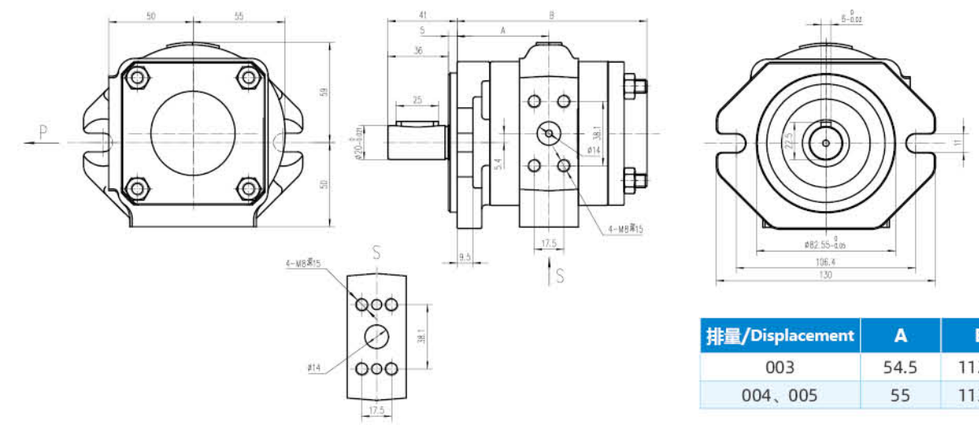

排量/Displacement	A	B
003	54.5	112.5
004、005	55	113.5

VG0安装连接尺寸/Installation Dimensions

E 型平键轴 Keyed shaft

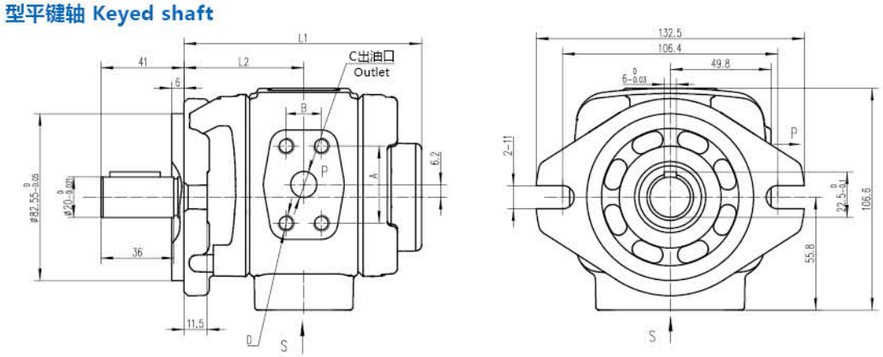

R 型花键轴 Spline shaft

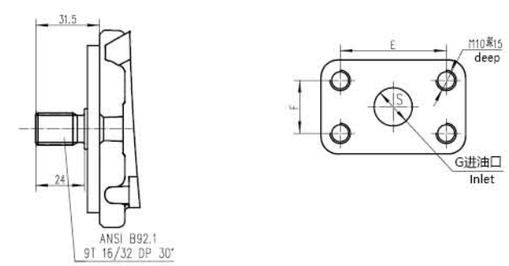

产品型号Model	L1	L2	A	B	C	D	E	F	G
VG0-08	107	54	38.1	17.5	Φ13	M8 Depth 13	47.6	22.2	Φ19
VG0-10	111	56					52.4	26.2	
VG0-13	117.5	59.25							
VG0-16	123	62							
VG0-20	131	66	47.6	22.2	Φ18	M10 Depth 15	58.7	30.2	Φ26
VG0-25	139	70			Φ19				Φ28
VG0-28	145	73							

VG1安装连接尺寸/Installation Dimensions

E 型平键轴 Keyed shaft

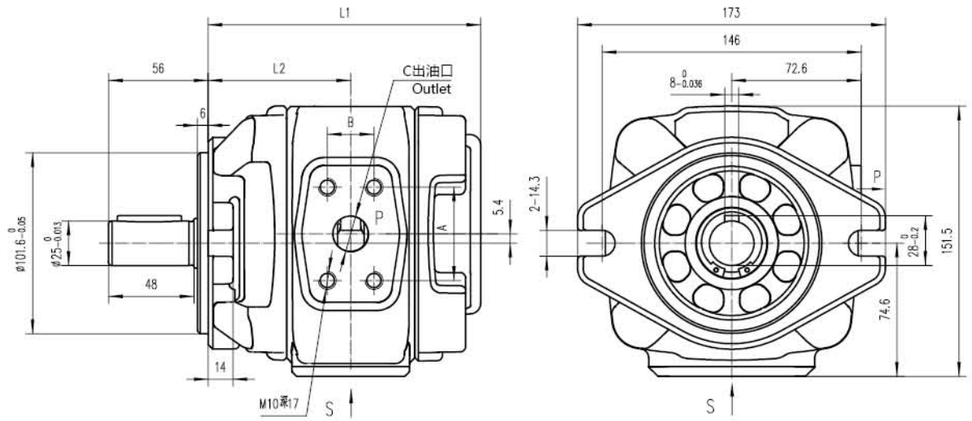

R 型花键轴 Spline shaft

产品型号 Model	L1	L2	A	B	C
VG1-25	139	73	47.6	22.2	Φ18
VG1-32	146	76.5			
VG1-40	153	80	52.4	26.2	Φ20
VG1-50	163	85			
VG1-63	177	92			
VG1-50H	163	85	油口尺寸见11页 see page 11 oil port size		
VG1-63H	177	92			

VG2安装连接尺寸/Installation Dimensions

E 型平键轴 Keyed shaft

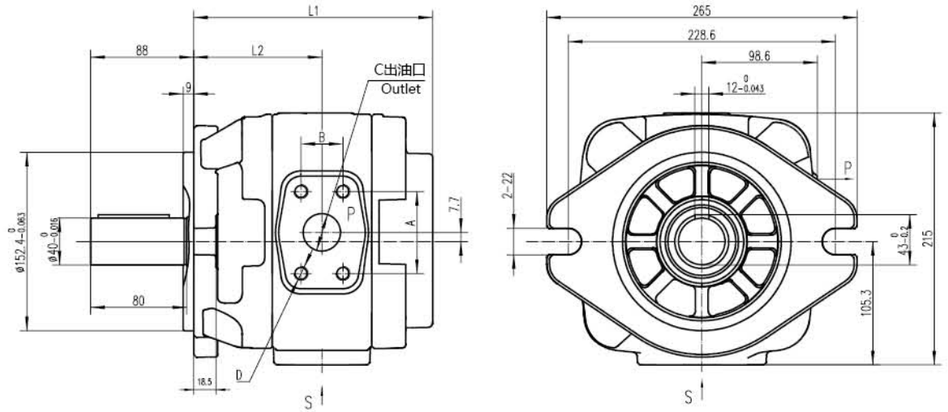

R 型花键轴 Spline shaft

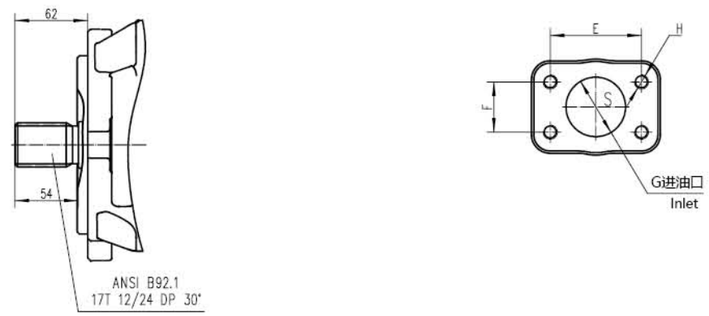

产品型号 Model	L1	L2	A	B	C	D	E	F	G	H
VG2-80	204	109.5	69.9	35.7	Φ32	M12 Depth 20	77.8	42.9	Φ51	M12 Depth 20
VG2-100	213	114								
VG2-125	225	120	79.4	36.5	Φ38	M16 Depth 25	88.9	50.8	Φ63.5	
VG2-145	235.5	124.75								
VG2-160	243	129					106.4	61.9	Φ76	M16 Depth 25

VG系列单泵进出油口连接尺寸
VG series single pump inlet and outlet oil port connection size

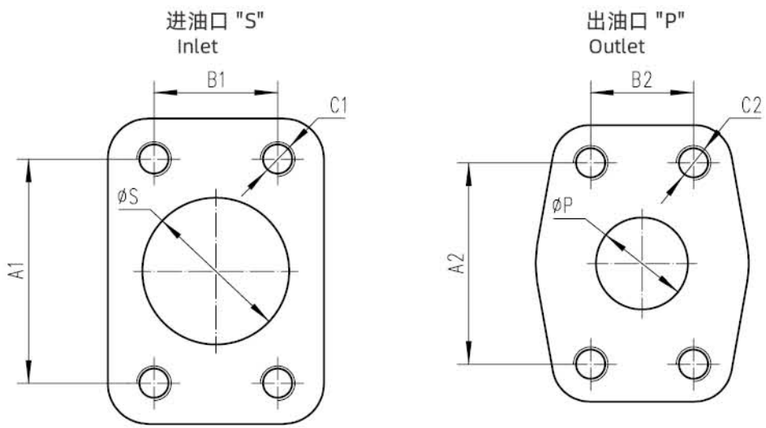

型号 Model	规格 Specifications	S	A1	B1	C1	对应法兰 Corresponding flange	P	A2	B2	C2	对应法兰 Corresponding flange
VG0	8	19	47.6	22.2	M10 Depth 15	F06	13	38.1	17.5	M8 Depth 13	F04
	10		52.4	26.2		F08					
	13										
	16										
	20	26	58.7	30.2		F10	18	47.6	22.2	M10 Depth 15	F06
	25	28					19				
	28										
VG1	25	32	58.7	30.2	M10 Depth 17	F10	18	47.6	22.2	M10 Depth 17	F06
	32										
	40						20	52.4	26.2		F08
	50										
	63										
	50(H)	38	69.9	35.7	M12 Depth 20	F12					
	63(H)	51	77.8	42.9		F16					
VG2	80	51	77.8	42.9	M12 Depth 20	F16	32	69.9	35.7	M12 Depth 20	F12
	100										
	125	63.5	88.9	50.8		F20	38	79.4	36.5	M16 Depth 25	F14
	145										
	160	76	106.4	61.9	M16 Depth 25	F24					

VG 系列双联泵 Series Double Pump

双联泵简介/Introduction double pump

双联泵是由两个单泵串联组装而成，具有一个共用的进油口和独立的出油口，按照两个泵的系列组合，可获得多种排量：
VG10D 系列、VG11D 系列、VG21D 系列、VG22D 系列

The double pump is composed of two single pumps assembled in series, with one oil inlet and independent oil outlet, according to the series of two pumps, can be obtained displacement:
VG10D series, VG11D series, VG21D series, VG22D series.

型号说明/Model Designation

VG11D	-63	-40	R	E	W	-A1
系列号 Series	轴端泵排量代号 ml/r Flow code of shaft end pump	盖端泵排量代号 ml/r Flow code of cover end pump	旋转方向 Rotation direction	轴伸形式 Shaft type	密封材料 Sealing material	设计号 Design number
VG10D	25、32、40、50、63	8、10、13、16、20、25	从泵轴端看 Viewed from shaft end of pump R=顺时针旋转 Right hand for clockwise L-逆时针旋转 Left hand for counter-clockwise	E= 平键轴 Straight key shaft R=SAE 花键轴 Spline shaft	W=丁晴橡胶 (Buna) NBR V=氟橡胶 (Viton) FKM	A1
VG11D	25、32、40、50、63	25、32、40、50、63				
VG21D	80、100、125、145、160	25、32、40、50、63				
VG22D	80、100、125、145、160	80、100、125、145、160				

产品特点/Product Features

- 前后油泵采用浮动花键联轴器式结构，配合独特的润滑脂配方保证油泵性能稳定、长寿命和低噪音；
- 最大排量可以扩展到 320CC，为电机和驱动器选型、机型选配提供足够的选择空间；
- 油泵出油口和吸油口方向灵活调配，安装简易；
- 任意排量组合，适应不同工况需求；

- The front and rear oil pumps adopt floating flower-splined coupling structure, with a unique grease formula to ensure stable performance, long life and low noise of the oil pump;
- The maximum displacement can be extended to 320CC, which provides enough choice space for motor and driver selection and model selection;
- The direction of oil outlet and suction outlet of oil pump is flexible and easy to install;
- Any displacement combination, to meet the needs of different working conditions.

VG10D安装连接尺寸/Installation Dimensions

E 型平键轴 Keyed shaft

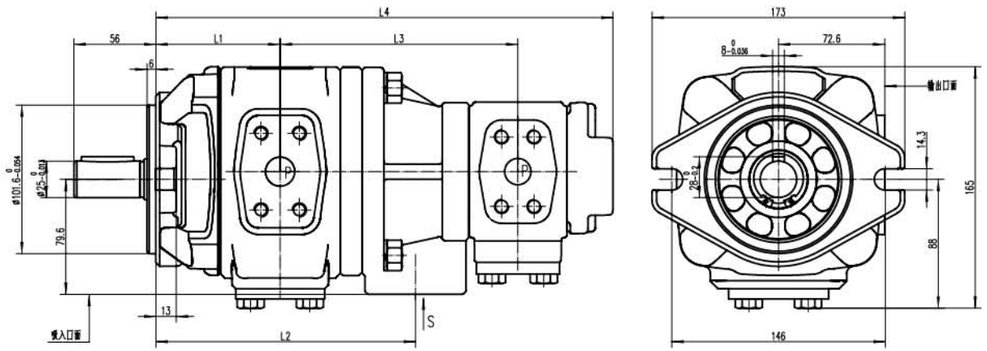

R 型花键轴 Spline shaft

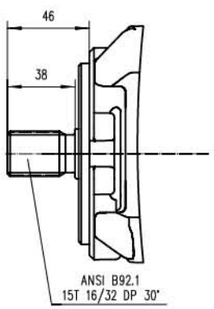

* 油口法兰尺寸见17页
See page 17 oil port size

前泵型号 Front pump	L1	L2	后泵型号/Rear pump											
			08		10		13		16		20		25	
			L3	L4	L3	L4	L3	L4	L3	L4	L3	L4	L3	L4
25	73	153.5	138.5	264.5	140.5	268.5	143.8	275	146.5	280.5	150.5	288.5	154.5	296.5
32	76.5	160.5	142	271.5	144	275.5	147.3	282	150	287.5	154	295.5	158	303.5
40	80	167.5	145.5	278.5	147.5	282.5	150.8	289	153.5	294.5	157.5	302.5	161.5	310.5
50	85	177.5	150.5	288.5	152.5	292.5	155.8	299	158.5	304.5	162.5	312.5	166.5	320.5
63	92	191.5	157.5	302.5	159.5	306.5	162.8	313	165.5	318.5	169.5	326.5	173.5	334.5

VG11D安装连接尺寸/Installation Dimensions

E 型平键轴 Keyed shaft

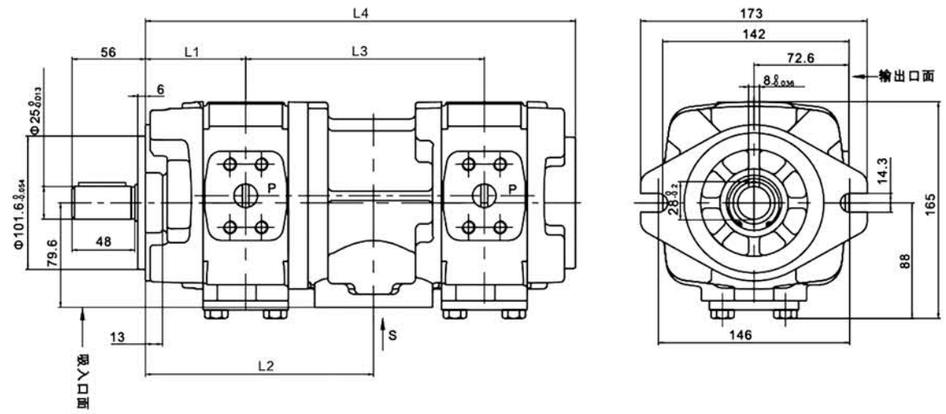

R 型花键轴 Spline shaft

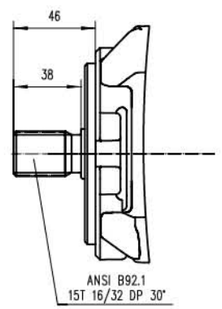

* 油口法兰尺寸见17页
See page 17 oil port size

前泵型号 Front pump	L1	L2	后泵型号/Rear pump									
			25		32		40		50		63	
			L3	L4	L3	L4	L3	L4	L3	L4	L3	L4
25	73	161	161	300								
32	76.5	168	164.5	307	168	314						
40	80	175	168	314	171.5	321	175	328				
50	85	185	173	324	176.5	331	180	338	185	348		
63	92	199	180	338	183.5	345	187	352	192	362	199	376

VG21D安装连接尺寸/Installation Dimensions

E 型平键轴 Keyed shaft

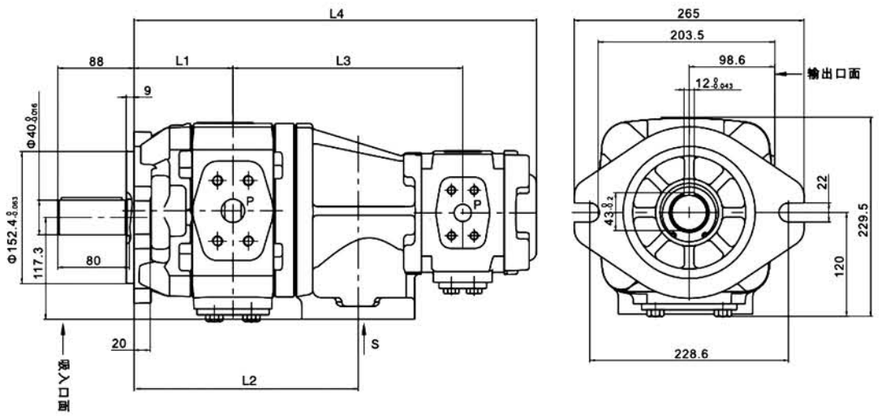

R 型花键轴 Spline shaft

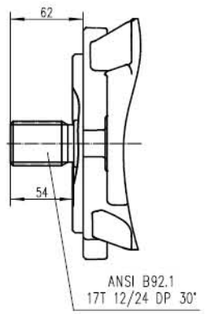

* 油口法兰尺寸见17页
See page 17 oil port size

前泵型号 Front pump	L1	L2	后泵型号/Rear pump									
			25		32		40		50		63	
			L3	L4	L3	L4	L3	L4	L3	L4	L3	L4
80	109.5	231	204.5	380	208	387	211.5	394	216.5	404	223.5	418
100	114	240	209	389	212.5	396	216	403	221	413	228	427
125	120	252	215	401	218.5	408	222	415	227	425	234	439
145	124.8	261.5	219.8	410.5	223.3	417.5	226.8	424.5	231.8	434.5	238.8	448.5
160	129	270	224	419	227.5	426	231	433	236	443	243	457

VG22D安装连接尺寸/Installation Dimensions

E 型平键轴 Keyed shaft

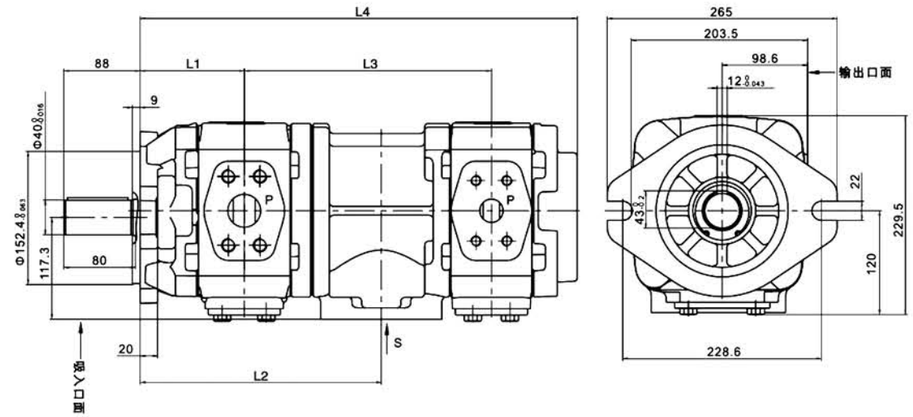

R 型花键轴 Spline shaft

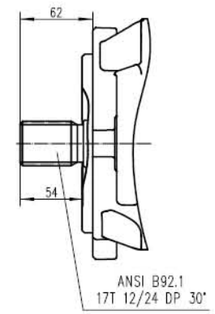

* 油口法兰尺寸见17页
See page 17 oil port size

前泵型号 Front pump	L1	L2	后泵型号/Rear pump									
			80		100		125		145		160	
			L3	L4	L3	L4	L3	L4	L3	L4	L3	L4
80	109.5	238.5	233	437								
100	114	247.5	237.5	446	242	455						
125	120	259.5	243.5	458	248	467	254	479				
145	124.8	269	248.3	467.5	252.8	476.5	258.8	488.5	263.5	498		
160	129	277.5	252.5	476	257	485	263	497	267.8	506.5	272	515

VG系列双联泵进出油口连接尺寸
VG series double pump inlet and outlet oil port connection size

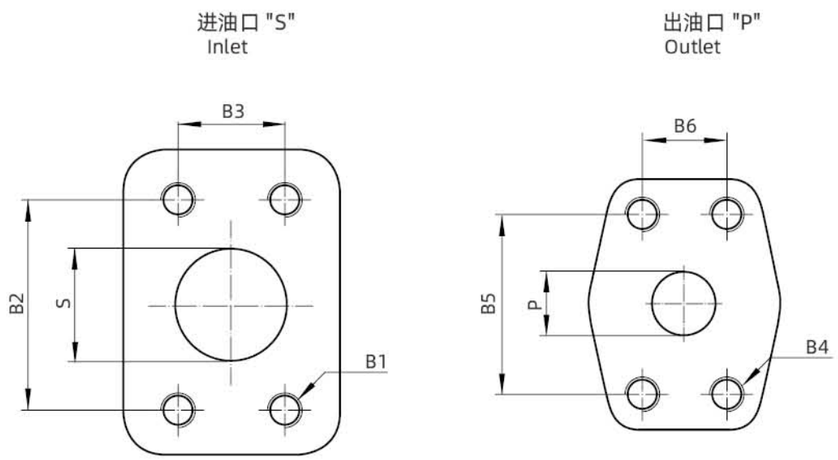

型号 Model	S	B1	B2	B3		规格 Specifications	P	B4	B5	B6
VG10D	Φ38	M12 深20 Depth	69.9	35.7	G0	8	Φ13	M8 Depth 13	38.1	17.5
						10				
						13				
						16				
VG11D	Φ51		77.8	42.9		20	Φ18	M10 深15 Depth	47.6	22.2
						25	Φ19			
					G1	25	Φ18	M10 深17 Depth	47.6	22.2
						32				
						40	Φ20		52.4	26.2
VG21D	Φ76	M16 深25 Depth	106.4	61.9		50				
						63				
					G2	80	Φ32	M12 深20 Depth	69.9	35.7
						100				
VG22D	Φ89		120.7	69.9		125	Φ38	M16 深25 Depth	79.4	36.5
						145				
						160				

VG 系列组合泵
Series Combined Pump

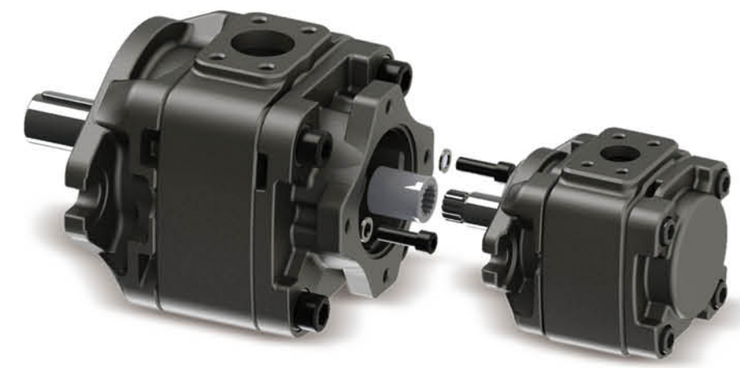

组合泵简介/Introduction Combined pump

组合泵是由两个单泵串联组装而成，具有两个独立的进油口和独立的出油口，按照两个泵的系列组合，可获得多种排量：VG11 系列、VG21 系列、VG22 系列

The Cobined pump is composed of two single pumps assembled in series, with two independent oil inlet and independent oil outlet, according to the series of two pumps,
can be obtained displacement: VG11 series, VG21 series, VG22 series.

型号说明/Model Designation

VG11	-63	-40	R	E	W	-A1
系列号 Series	轴端泵排量代号 ml/r Flow code of shaft end pump	盖端泵排量代号 ml/r Flow code of cover end pump	旋转方向 Rotation direction	轴伸形式 Shaft type	密封材料 Sealing material	设计号 Design number
VG11	25、32、40、50、63 50H、63H	25、32、40、50、63 50H、63H	从泵轴端看 Viewed from shaft end of pump R=顺时针旋转 Right hand for clockwise L-逆时针旋转 Left hand for counter-clockwise	E= 平键轴 Straight key shaft R=SAE 花键轴 Spline shaft	W=丁晴橡胶 (Buna) NBR V=氟橡胶 (Viton) FKM	A1
VG21	80、100、125、145、160	25、32、40、50、63 50H、63H				
VG22	80、100、125、145、160	80、100、125、145、160				

VG11安装连接尺寸/Installation Dimensions

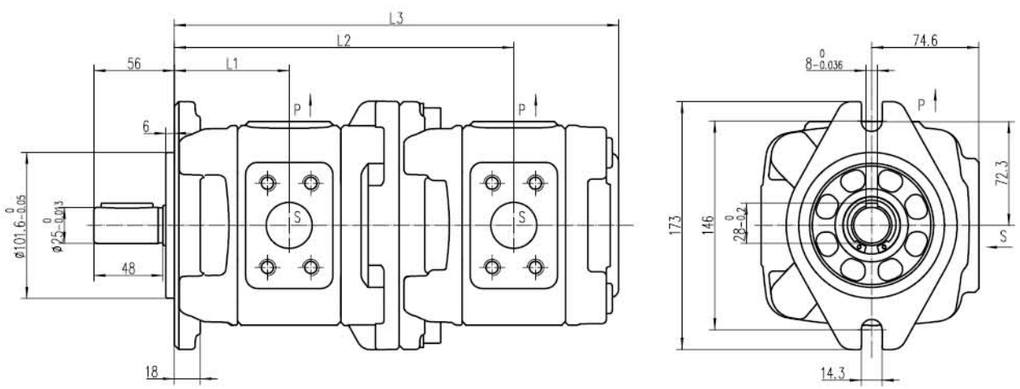

* 油口法兰尺寸见11页
See page 11 oil port size

前泵型号 Front pump	L1	后泵型号/Rear pump									
		25		32		40		50		63	
		L2	L3	L2	L3	L2	L3	L2	L3	L2	L3
25	73	215.5	283								
32	76.5	222.5	290	226	297						
40	80	229.5	297	233	304	236.5	311				
50	85	239.5	307	243	314	246.5	321	251.5	331		
63	92	253.5	321	257	328	260.5	335	265.5	345	272.5	359

VG21安装连接尺寸/Installation Dimensions

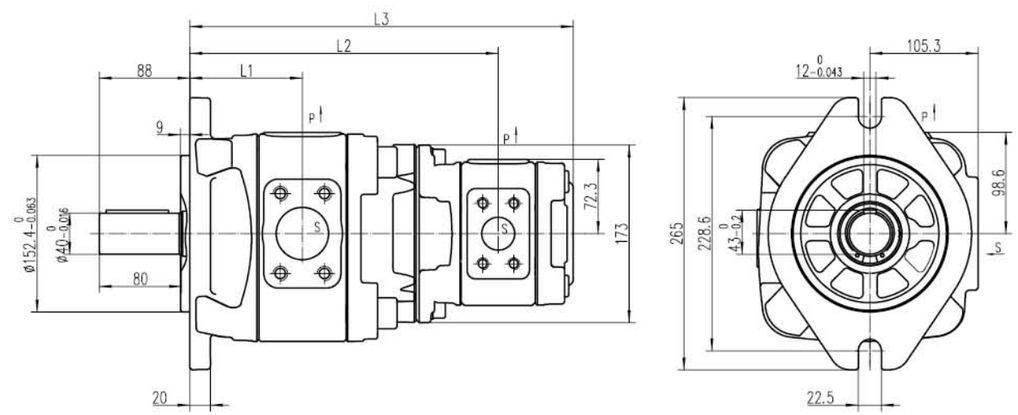

* 油口法兰尺寸见11页
See page 11 oil port size

前泵型号 Front pump	L1	后泵型号/Rear pump									
		25		32		40		50		63	
		L2	L3	L2	L3	L2	L3	L2	L3	L2	L3
80	109.5	293	359	296.5	366	300	373	305	383	312	397
100	114	302	368	305.5	375	309	382	314	392	321	406
125	120	314	380	317.5	387	321	394	326	404	333	418
145	124.8	323.5	389.5	326.5	396.5	330.5	403.5	335.5	413.5	342.5	427.5
160	129	332	398	335.5	405	339	412	344	422	351	436

VG22安装连接尺寸/Installation Dimensions

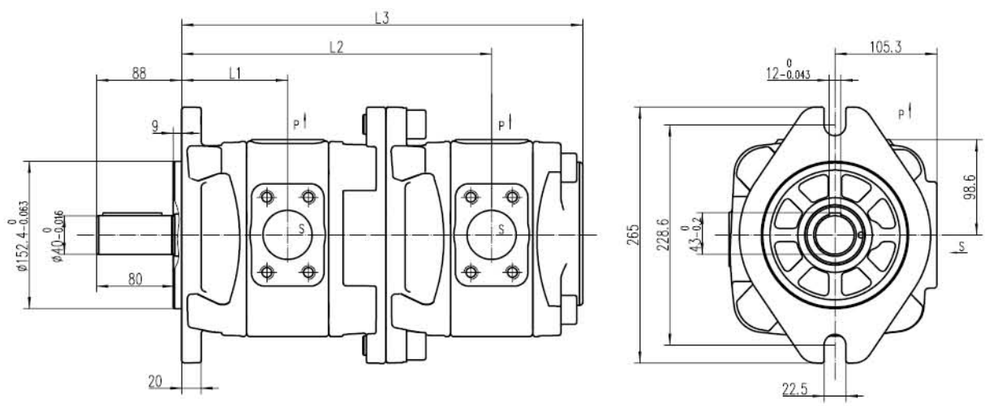

* 油口法兰尺寸见11页
See page 11 oil port size

前泵型号 Front pump	L1	后泵型号/Rear pump									
		80		100		125		145		160	
		L2	L3	L2	L3	L2	L3	L2	L3	L2	L3
80	109.5	320.5	412								
100	114	330.5	420	335	429						
125	120	342.5	432	347	441	353	453				
145	124.8	352	441.5	356.5	450.5	362.5	462.5	367	472		
160	129	360.5	450	365	459	371	471	375.5	480.5	380	489

使用注意事项
Points for attention to use

1. 油泵安装 /Oil pump installation

◆ 泵轴与电机轴连接尽可能使用挠性联轴器，以避免产生弯曲力矩或轴向推力，泵轴与电机轴最大允许同轴度误差 0.15mm;
◆ 在安装联轴器时避免产生轴向力，严禁使用敲击或强压力方式安装。
◆ As far as possible, flexible coupling is used for connection between pump shaft and motor shaft to avoid bending moment or axial thrust. The maximum allowable coaxiality error between pump shaft and motor shaft is 0.15mm

2. 进出口连接 /Inlet and outlet connection

◆ 根据油泵的油口选择管道的内径（最佳吸入口流速为 0.6~1.2m/s）；
◆ 吸油管路的设计尺寸必须遵守允许的入口工作压力（绝对值为 0.8bar 至 2bar），必须避免吸油管路弯曲和几个泵的吸油管组合；
◆ 如果使用吸油过滤器，推荐吸油过滤器按照油泵的最大流量选取，乘以系数 2-3 倍，过滤绝对精度为 50~180um，必须确保即使过滤器受到污染，也不会超过系统的最低允许入口工作压力；
◆ 所选吸油管浸没深度应尽可能深，即使在最大流量时也不得形成涡流，否则会有吸放空气的危险；
◆ 吸油管路设计时，吸油口不推荐垂直朝下安装，如油箱位于油泵下方，吸油口应朝上或位于水平两侧。

◆ Select the inner diameter of the pipeline according to the oil port of the oil pump (the optimal inlet velocity is 0.6-1.2m/s);
◆ The design dimensions of the suction tubing line must comply with the allowable inlet working pressure (absolute value of 0.8bar to 2bar), and must avoid bending the suctiontubing line and the combination of several pump suction tubing;
◆ If the oil suction filter is used, it is recommended that the oil suction filter be selected according to the maximum flow of the oil pump, multiplied by the coefficient of 2-3 times, and the absolute filtration accuracy is 50-180um. It must be ensured that even if the filter is polluted, it will not exceed the minimum allowable inlet working pressure of the system;
◆ The immersion depth of the selected suction tubing should be as deep as possible. Eddy currents should not be formed even at the maximum flow rate, otherwise there will be a risk of air suction and release;

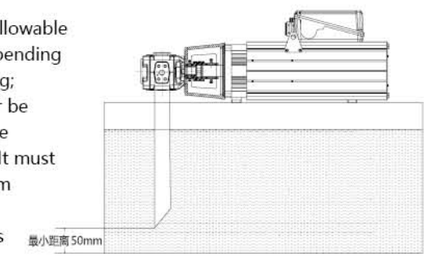

◆ In the design of suction pipe, the oil inlet is not recommended to be installed vertically downward. If the oil tank is located below the oil pump, the oil inlet should be up or on both horizontal sides.

3. 组合泵 /The combination of pump

◆ 组合泵时必须确保每个阶段均遵守相关泵类型所允许的工作数据；
◆ 所有组合泵的旋转方向必须相同；
◆ 具有最大扭矩的泵，施加间歇负载的泵应作为组合泵的第一阶段予以提供；
◆ 最大通轴传动扭矩必须由项目规划员针对各种应用情况进行检查。

- When combining pumps, it is necessary to ensure that each stage complies with the allowable working data of the relevant pump type;
- The rotation direction of all combined pumps must be the same;
- Pumps with maximum torque, variable displacement or applied load shall be provided as the first stage of the combined pump;
- Maximum shaft drive torque must be checked by the project planner for various applications.

• 泵级驱动扭矩计算如下：
Pump-stage driving torque is calculated as follows

$$T = \frac{\Delta p \cdot V \cdot 0.0159}{\eta}$$

液压机械 Hydraulic machinery

T: 扭矩 Torque（Nm）
△p: 工作压力 Working pressure（bar）
V: 排量 Displacement（cm^3）
η: 液压机械效率
Hydraulic mechanical efficiency

最大允许扭矩 Maximum permissible torque（Nm）

类 型 Type	驱动扭矩 Drive torque		输出扭矩 Outlet torque
	平键轴..E Keyed shaft	花键轴 ..R Spline shaft	
VG0	250	250	150
VG1	450	450	280
VG2	1100	1400	700

◆ 组合泵的总扭矩不得超过最大驱动扭矩。
◆ 不允许联合吸入。
◆ 后面的泵的轴设计必须为 "R"（花键）。

- The total torque of the combined pump shall not exceed the maximum driving torque.
- Combination inhalation is not allowed.
- Rear pump shaft design must be "R" (spline).

4. 初次运转操作 /Initial operation

◆ 初次启动时检查液压系统是否正确安装连接；
◆ 在运转前应通过吸油管或出油管为油泵内部注满液压油，打开系统油路的安全阀，在无负载情况下间断运转马达，确保油泵充分润滑，并排放管路内的空气（如系统油路未设置安全阀，可采用油泵出口连接处稍微放松，造成些许泄露的方法进行排气。当泄露的油液中不再出现气泡时，再将松开部分按照规定的扭矩锁紧。注意：采用此方法时，必须在低压状况下，且保证压力不会升高）
◆ 不能进行加载启动，否则会导致油泵内部损坏；
◆ 反复进行点动操作后，吸气的声音随之消失，空气混入声音消失后方可连续运转。如果反复几次点动操作后空气混入声音不消失时，应该是进油侧管路有空气泄露。

- Check whether the hydraulic system is properly installed and connected at the initial start;
- Before operation, should through the suction tubing or flowline for internal filled with hydraulic oil pump, oil relief valve, open the system under the condition of no load operating motors, stay sufficient lubrication oil pump, and discharge the air in the piping (oil is not set the relief valve, such as system can use the pump export joint relax a little, some methods for exhaust gas leak. When bubbles no longer appear in the leaked oil, the loosened part shall be locked according to the specified torque. Note: when using this method, it must be under low pressure condition and ensure that the pressure does not rise.)
- Unable to start loading, otherwise it will cause internal damage of the oil pump;
- After repeated dot operation, the suction sound will disappear, and the continuous operation can be carried out only after the air mixing sound disappears. If the air mixing sound does not disappear after repeated dot operation for several times, it should be that there is air leakage in the pipeline at the inlet side.

5. 保养维修 /Maintenance

◆ 为提高油泵的使用寿命，应定期检查液压系统的异常震动、噪音、油液温度、油液情况、油箱内是否有气泡产生以及有无泄露等问题，并及时维护；
◆ 所有油泵在出厂前已通过性能测试，任何企业和个人未经本公司允许，请不要拆卸、重新组装、改造油泵。如果未经本公司允许，而进行拆卸、重新组装、改造，则不在本公司的报修范围内，本公司不承担任何责任。

- In order to improve the service life of the oil pump, the abnormal vibration, noise, oil temperature, oil condition of the hydraulic system, whether there are bubbles in the tank and whether there are leaks and other problems should be checked regularly and maintained in time;
- All the oil pumps have passed the performance test before leaving the factory. Any enterprise or individual shall not disassemble, reassemble or transform the oil pumps without the permission of the company. If disassemble, reassemble or transform the oil pumps without the permission of the company, it is not within the scope of the company's repair report and the company shall not assume any responsibility.

ABT 系列伺服叶片泵 Series Servo Vane Pump

ABT系列伺服泵是我公司与美国艾伯特流体动力有限公司、浙江大学机电控制工程研究所三方合作共同研发的高性能伺服液压系统专用油泵。其核心部件从国外进口。

本产品我公司拥有自主知识产权并获得国家创新基金支持，广泛应用于橡塑、压铸、鞋革、锻压、挤压、折弯、剪板机械等伺服液压系统中。

ABT Series Servo Pump is high perfromance servo hydraulic system special oil pump. It is researched and developed together by three party-Ningbo Vicks Hydraulic Co.,Ltd. American Albert Hydraulic Co.,LTD. Zhejiang University Mechanical Control Engineering Research Institute. The core components are imported from abroad. We have the proprietary intellectual property rights for this product and we have got the state innovation fund support, the pump have been widely used in servo hydraulic systems of rubber and plastic machines, shoes machines, forging and press machines, bending machines and shearing machines.

其主要特点为/Main Features

1、柱销式叶片结构设计，使油泵在启动时阻矩小，电流小，更节能。
2、采用外泄、泄漏量可调控设计，明显降低油泵温升。根据液压元器件泄漏大小，可灵活调整外泄量，泵在低速高压工况下脉动小，制品精度高。
3、柱销底部通高压油和辅助弹性机构的合理配合，使油泵可以在低速下正常工作，能适应伺服液压系统快慢速、高低压、正反转快速切换的工况。
4、双作用及正反转结构设计，使油泵工作更加平稳，伺服液压系统的响应速度更快。
5、高压、高速结构和双刃口叶片设计，转速范围广，抗污能力强，使用寿命长。
6、低噪声结构设计，排量范围广，可根据客户要求灵活定制不同排量。
7、采用插装式结构，维修时只需更换泵芯，维修更便捷、成本更低。
8、双泵油口采用一进两出设计，结构更加紧凑，安装空间小。
9、进出油口有四种不同的相对方位，安装灵活。

1. Dowel pin type vane kits designation can make the pump with small resistance, low electronic, and with more energy saving.
2. Use outside leakage and leakage volume control designation low the oil temparature obviously. Based on the hydraulic components leakage volume, can adjust the oil leakage smartly, the pump pressure pulse is small at high pressure and low speed, the injection finished products will be more higher accuracy.
3. With the coordination of high pressure oil and vice spring structure, can make the pump run normally at low speed, can fit low and high speed shift, high and low pressure speed shift, right and left rotation shift etc working status of servo hydraulic system perfectly.
4. Double action and right-left rotation structure designation make the pump work more steadily, servo hydraulic system response more quickly.
5. High pressure, high speed structure and double cutting edges designation make the speed range more wide, and with more better polution resistance, and more longer working life.
6. Low noise stucture designation and wide range of flow, can be customized according to different requirements.
7. Use the cartridge kit installation structure, repairing only need change the cartridge kit, more convenient for repairing, and with more lower cost.
8. Double pump use one inlet port and two outlet ports, the structure is more compact with small installation space.
9. There are four directions each at inlet and outlet port, installation is more flexible.

ABT-T 系列型号说明/Model Designation

ABT2T	-80	-2	R	02	-C	1
系列号 Series	排量 ml/r Flow code	轴伸形式 Shaft type	旋转方向 Rotation	出油口位置 Outlet Positions	设计号 Design number	密封等级 Sealing Level
ABT1T	6, 10, 16, 20, 25, 32, 40, 50, 55, 64	-1 平键轴 -2 平键轴 Keyed shaft	(从泵的轴端看) (Viewed from shaft end of pump) R-顺时针旋转 Right hand for clockwise L-逆时针旋转 Left hand for counter-clockwise	(从泵的轴端看) (Viewed from shaft end of pump) 00-进油口对面 Opposite inlet port 01-进油口同侧 Inline with inlet 02-从进油口逆时针90° 90° CCW from inlet 03-从进油口顺时针90° 90° CW from inlet	C	1-S1, 丁晴橡胶 (Buna) NBR 2-S2, 氢化丁晴 HNBR
ABT2T	64, 80, 100, 110, 125, 140, 160	-2 平键轴 Keyed shaft				
ABT3	160, 180, 190, 200	-1 平键轴 Keyed shaft				

注：多种规格安装尺寸、双联泵及花键轴详见叶片泵综合样本
Note: Types of specifications installation size, double pump and splined key shaft details can be found in the vane pump catalogue.

T7-E 系列变速驱动用叶片泵 Vane pump for variable speed drive

本产品广泛应用于橡胶、压铸、鞋革、锻压、挤压、折弯、剪板机械等伺服系统中。

The pump have been widely used in servo hydraulic systems of rubber and plastic machines，shoes machines，forging and press machines，bending machines and shearing machines。

主要特点/Main Features

1、柱销式叶片结构设计，使油泵在启动时阻矩小，电流小，更节能。
2、柱销底部通高压油和辅助弹性机构的合理配合，使油泵可以在低速下正常工作，能适应伺服液压系统快慢速、高低压、正反快速切换的工况。
3、双作用及正反转结构设计，使油泵工作更加平稳，伺服液压系统的响应速度更快。
4、高压、高速结构和双刃口叶片设计，转速范围广，抗污能力强，使用寿命长。
5、低噪音结构设计，排量范围广，可根据客户要求灵活定制不同排量。
6、采用插装式结构，维修时只需更换泵芯，维修跟便捷、成本更低。

1、Dowel pin type vane kits designation can make the pump with small resistance, low electronic, and with more energy saving.
2、With the coordination of high pressure oil and vice spring structure, can make the pump run normally at low speed, can fit low and high speed shift, high and low pressure speed shift, right and left rotation shift etc working status of servo hydraulic system perfectly.
3、Double action and right-eft rotation structure designation make the pump work more steadily, servo hydraulic system response more quickly.
4、High pressure, high speed structure and double cutting edges designation make the speed range more wide, and with more better polution resistance, and more longer working life.
5、Low noise stucture designation and wide range of flow, can be customized according to different requirements.
6、Use the catridge kit insallation structure, repairing only need change the cartridge kit, more convenient for repairing, and with more lower cost.

住友齿轮泵/Sumitomo Gear Pump

主要特点/Features

1. 超低音的设计： 采用独特的直线共轭内啮合齿形，避免了困油的影响，极大降低了泵的噪音和压力脉动，尤其当压力提高时，噪音依然保持较低的水平。

2. 优秀的耐久性能： 采用特殊的材料和处理工艺，从而使泵的寿命更长。

3. 低脉动： 脉动几乎没有，适合精密的速度控制要求的系统。

1. Subwoofer design: The unique linear conjugate internal meshing tooth profile avoids the influence of oil trapping and greatly reduces the noise and pressure pulsation of the pump. Especially when the pressure increases, the noise remains low.
2. Excellent durability: The use of special materials and processing technology, so that the life of the pump is longer to.
3. Low pulsation: almost no pulsation, suitable for systems that require precise speed control.

QT62 - 100 F - BP

- 回转方向以及油口位置 Rotation direction and oil port position
- 理论排量 Theoretical Displacement
- 2: 最大压力16Mpa / N: 最大压力17.5Mpa / 2: Maximum pressure 16Mpa / N: Maximum pressure 17.5Mpa
- 尺寸 Size
- 基本型号 Series Name

进出油口相对位置/Inlet and outlet oil port positions 转向/Rotation	右转 Right	左转 Left
同向进出 Same direction Inlet and outlet 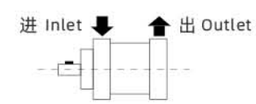	无记号 N/M	L
反向进出 Reverse direction inlet and outlet 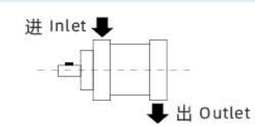	F	E

艾可勒齿轮泵/Eckerle Gear Pump

纯德国制造，经过近半个多世纪的发展及不断完善，具有高压力、低噪音、低脉动、重量轻等优势，被广泛应用于注塑机、压铸机、折弯机、油压机等全球液压机械中。

Made in Germany, after nearly half a century of development and continuous improvement, it has the advantages of high pressure, low noise, low pulsation, and light weight. It is widely used in injection molding machines, die casting machines, bending machines, hydraulic presses and other global hydraulic machinery.

EIP C3 - 032 RK23 - 1X SXXX

- 特殊型号：非标准油泵
  Special model: non-standard oil pump
- 设计编号 Design number
  第一位：安装尺寸设计编号
  第二位：油泵内部设计编号
  The first number: installation size design number
  The second number: the internal design number of the oil pump
- 出入油口法兰形式
  3：SAE法兰连接
- 安装法兰 Mounting flanges
  2：SAE/B-2孔法兰，EIPC3止口101.6mm/EIPC5止口127mm
  2: SAE/B-2 hole flange, EIPC3 spigot 101.6mm/EIPC5 spigot 127mm
- 轴型 Shaft type:
  A：平键(单泵)
  B：SAE齿形(单泵)
  A: Straight keyed (single pump)
  B: SAE spline keyed (single pump)
- 旋转方向：R顺时针/L逆时针
  Rotation direction:
  R clockwise/L counter clockwise
- 排量cc/rev
  Displacement cc/rev
- 外形编号3或5
  Shape number 3 or 5
- C型：带铝外壳的齿轮泵
  Type C: Gear pump with aluminum housing
- 艾可勒内齿轮泵
  Eckerle internal gear pump

伺服驱动/Servo Drive

台达伺服驱动
DELTA Servo Drive

VFD-VJ系列是台达致力于橡塑行业应用多年的油电伺服驱动器，具有2.2倍优异的过载性能、深度弱磁控制、电机启动速度快、输出一致性好、多重保护等特色，支持SPM和IPM电机算法，提供风冷和液冷两种机型，适用于各种工作环境。

The VFD-VJ series is a diesel-electric servo driver that Delta has devoted to the rubber and plastic industry for many years. It has 2.2 times the excellent overload performance, deep field weakening control, fast motor starting speed, good output consistency, multiple protections and other features. It supports SPM And IPM motor algorithm, provide air-cooled and liquid-cooled models, suitable for various working environments.

VFD 370 VL 43 C - J

- J：风冷型 Air-cooled
- 43：输入电压 Input voltage
  23:230V 三相
  43:460V 三相
- C：版本 Version
- 370：风冷型驱动器功率 Air-cooled drive power
  110: 15HP(11kW)
  150: 20HP(15kW)
  185: 25HP(18.5kW)
  220: 30HP(22kW)
  300: 40HP(30kW)
  370: 50HP(37kW)
  450: 60HP(45kW)
  550: 75HP(55kW)
  750: 100HP(75kW)
- VFD：产品系列 Product series

- JO

- JO：油冷型 Oil-cooled
  油冷型驱动器功率 Oil-cooled drive power
  300: 40HP(30kW)
  370: 50HP(37kW)
  450: 60HP(45kW)
  550: 75HP(55kW)
  750: 100HP(75kW)

台达伺服驱动外型图及尺寸表
DELTA Servo drive outline drawing and dimension table

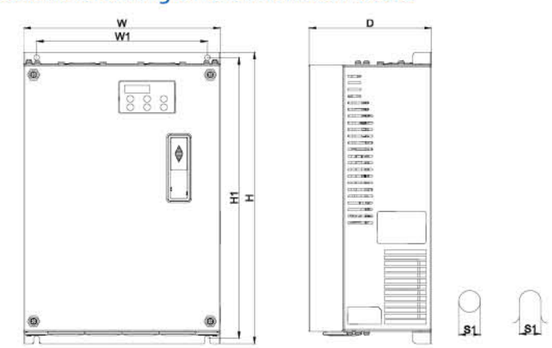

型号 Model	W（mm）	W1（mm）	H（mm）	H1（mm）	D（mm）	S1（mm）
VFD110VL43C-J	235	204	350	337	146	6.5
VFD150VL43C-J	235	204	350	337	146	6.5
VFD185VL43C-J	235	204	350	337	146	6.5
VFD220VL43C-J	235	204	350	337	146	6.5
VFD300VL43C-J	255	226	403.8	384	168	8.5
VFD370VL43C-J	255	226	403.8	384	168	8.5
VFD450VL43C-J	330	285	565	540	273.4	11.0
VFD550VL43C-J	330	285	565	540	273.4	11.0
VFD750VL43C-J	330	285	565	540	273.4	11.0
VFD300VL43A-J	370	335	589	560	260	13.0
VFD370VL43A-J	370	335	589	560	260	13.0
VFD450VL43A-J	370	335	589	560	260	13.0
VFD550VL43A-J	370	335	589	560	260	13.0
VFD750VL43A-J	370	335	589	560	260	13.0

ABT 伺服驱动 Servo Drive

ABT系列伺服驱动是我司与美国艾伯特流体动力有限公司合作共同研发的高性能伺服液压专用驱动，专为油泵控制设计，精确速度控制，实现最大程度节能。

The ABT series servo drive is a high-performance servo-hydraulic special drive jointly developed by our company and the United States Albert Fluid Power Co., Ltd., designed for oil pump control, precise speed control, and maximum energy saving.

ABT580 - 030 - 3 T

- ABT580：产品系列号 Product series
- 030：驱动器额定输出功率：Rated output power of the drive:

011: 11kw	045: 45kw	160: 160kw	315: 315kw
015: 15kw	055: 55kw	185: 185kw	355: 355kw
018: 18kw	075: 75kw	200: 200kw	400: 400kw
022: 22kw	093: 93kw	220: 220kw	450: 355kw
030: 30kw	110: 110kw	250: 250kw	500: 500kw
037: 37kw	132: 132kw	280: 280kw	450: 450kw

- 3：三相380V Three phase
- T：空:不需要电抗器 No: DC reactors are not suppor ted；T:内置直流电抗器 T: Built-in DC reactor

ABT580驱动参数表/Driving parameter table

驱动器型号 Model	输入电压 Input Voltage	输入电流 (A) Input Current	输出电流 (A) Output Current	适配电机 (KW) Adaptive Motor
ABT580-011-3	三相380V 范围 15%~20%	26.0	25.0	11.0
ABT580-015-3		35.0	32.0	15.0
ABT580-018-3		38.5	37.0	18.5
ABT580-022-3		46.5	45.0	22.0
ABT580-030-3T		62.0	60.0	30.0
ABT580-037-3T		76.0	75.0	37.0
ABT580-045-3T		92.0	90.0	45.0
ABT580-055-3T		113.0	110.0	55.0
ABT580-075-3T		157.0	152.0	75.0
ABT580-093-3T		180.0	176.0	93.0
ABT580-110-3T		214.0	210.0	110.0
ABT580-132-3T		256.0	253.0	132.0
ABT580-160-3T		307.0	304.0	160.0
ABT580-185-3T		345.0	340.0	185.0
ABT580-200-3T		385.0	380.0	200.0
ABT580-220-3T		430.0	426.0	220.0
ABT580-250-3T		468.0	465.0	250.0
ABT580-280-3T		525.0	520.0	280.0
ABT580-315-3T		590.0	585.0	315.0
ABT580-355-3T		665.0	650.0	355.0
ABT580-400-3T		785.0	725.0	400.0
ABT580-450-3T		883.0	820.0	450.0
ABT580-500-3T		920.0	900.0	500.0

ABT580 伺服驱动外型图及尺寸表 Servo drive outline drawing and dimension table

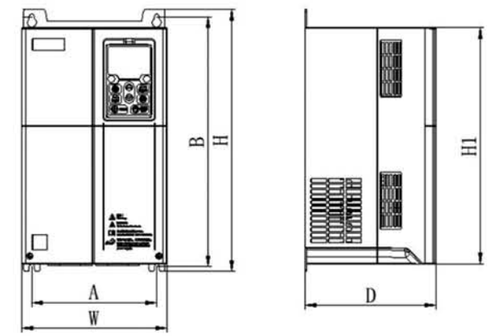

驱动器型号 Model	外形尺寸(mm) Dimension				安装尺寸(mm) Installation Dimension		安装孔径 Mounting Hole Dia	制动单元 Braking unit			
单位 Unit	W	H	H1	D	A	B	mm	方式 Model	适配型号 Adaptive Model	安装尺寸(mm) A	安装尺寸(mm) B
ABT580-011-3	170	345	310	175	142	328.5	Φ7	内置 internal	-	-	-
ABT580-015-3											
ABT580-018-3	200	360	325	180	172	343.5	Φ7				
ABT580-022-3											
ABT580-030-3T	260	410	373	205	190	396	Φ7				
ABT580-037-3T											
ABT580-045-3T	310	550	535	265	245	531	Φ10				
ABT580-055-3T											
ABT580-075-3T											
ABT580-093-3T	350	660	640	285	280	641	Φ10				
ABT580-110-3T											
ABT580-132-3T	430	715	-	295	320	695	Φ10	外置 external	BR530E-4T132	90	254
ABT580-160-3T	470	1000	-	318	360	972	Φ12		BR530E-4T200	140	384
ABT580-185-3T											
ABT580-200-3T	520	1088	-	338	380	1060	Φ12				
ABT580-220-3T											
ABT580-250-3T	650	1220	-	330	440	1190	Φ12		BR530E-4T315		
ABT580-280-3T											
ABT580-315-3T	740	1290	-	420	500	1255	Φ14				
ABT580-355-3T											
ABT580-400-3T									BR530E-4T450		
ABT580-450-3T	1060	1800	-	500	-	-	立式				
ABT580-500-3T									BR530E-4T630		

菲仕表贴(风冷)参数表

PHASE surface mount(air cooling) Parameters

电机型号 Motor Model	额定转速 Rated speed	额定扭矩 Rated torque	额定功率 Rated Power	额定电流 Rated Current	电压等级 Rated Voltage	峰值扭矩 Peak Torque	扭矩常数 Torque constant	转动惯量 Inertia with brake Opeion	额定频率 Rated Frequncy
单位 Unit	rpm	Nm	kW	A	V	Nm	Nm/A	Kg*cm²	Hz
U1004F15.3	1500	38	6.0	11.6	380	105	3.32	50	100
U1004F17.3	1700	38.9	7	15.2	380	105	2.81	50	113
U1004F20.3	2000	42	8.8	18.8	380	105	2.37	50	133
U1005F15.3	1500	55	8.6	16.6	380	157	3.31	70	100
U1005F17.3	1700	57	10	20.4	380	157	2.81	70	113
U1005F20.3	2000	58	12	24.3	380	157	2.6	70	133
U1007F15.3	1500	74	11.6	23.9	380	210	3.37	90	100
U1007F17.3	1700	80	14	28.2	380	210	2.85	90	113
U1007F20.3	2000	87	18.2	36.7	380	210	2.53	90	133
U1008F15.3	1500	103	16.4	33.2	380	260	3.38	110	100
U1008F17.3	1700	96.2	17.6	35.1	380	260	2.98	110	113
U1008F20.3	2000	95.6	20.4	40.1	380	260	2.58	110	133
U1010F15.3	1500	128	22	41	380	310	3.3	130	100
U1010F18.3	1800	122	23	44	380	310	2.87	130	113
U1010F20.3	2000	135	28.3	60.5	380	310	2.37	130	133
U1013F15.3	1500	186	29	61	380	410	3.26	170	100
U1013F17.3	1700	164.2	28.7	55.39	380	410	3.19	170	113
U1013F20.3	2000	175	36.7	73.7	380	410	2.53	170	133
U1315F15.3	1500	195.6	30.5	71.5	380	450	3.02	317	100
U1315F17.3	1700	195.29	35.9	72.9	380	450	2.98	317	113
U1315F20.3	2000	191	40	97.8	380	450	2.15	317	133
U1320F15.3	1500	210	33	62	380	550	3.43	410	100
U1320F17.3	1700	229	39.4	92.6	380	550	2.94	410	113
U1320F18.3	1800	232	44	96.46	380	550	2.64	410	120
U1320F20.3	2000	269	56.3	120.7	380	550	2.37	410	133
U1325F15.3	1500	308	49.6	99.9	380	690	3.43	500	100
U1325F17.3	1700	304.5	55.4	111	380	690	3.05	500	113
U1325F20.3	2000	291.2	71.9	141.5	380	690	2.29	500	133
U1330F15.3	1500	380	60	106	380	830	3.56	593	100
U1330F17.3	1700	399	71	155.5	380	830	2.84	593	113
U1330F20.3	2000	389	81.4	155.3	380	830	2.67	593	133
U1340F15.3	1500	450	70	130	380	1100	3.56	777	100
U1340F20.3	2000	511	107	229.7	380	1100	2.37	777	133

注：(1) 最大转速：若不使用驱动器的弱磁控制功能，最大转速一般比额定转速高500rpm；若使用驱动器的弱磁控制功能，最大转速由驱动器来决定。
(2) 电机的极数：以上电机的极数均为8极，即4对极。

Note: 1. Max speed: If you don't use the flax-weakening control function, the max rotational speed will be higwer 500rpm than rated speed. If you use the flax-weakening control function, the max rotational speed is decided by the drive.
2. Pole Number: The pole number is of above motor is 8 poles, it's 4pairs of poles.

电机的安装/Servo motor installation:

电机的转轴主要采用标准轴(光轴或带单键轴)、内花键轴、外花键轴或中空轴；电机接线盒内编码器的信号接线主要采用PCB板，也可选择航空插座；电机的安装可选择法兰安装或底板安装。

The motor's spindle is the standard shaft coptic axis or with single bond axis. Internal splined shaft outer splined shaft or hollow shaft. The signal of encoder inside of motor's junction box uses PCB board, also can choose aerial socket. The motor installiy can choose flange or baseplate.

菲仕表贴(油冷)参数表

PHASE surface mount(Oil Cooling) Parameters

电机型号 Motor model	额定转速 Rated Speed	额定扭矩 Rated Torque	额定功率 Rated Power	额定电流 Rated Current	额定电压 Rated Voltage	峰值扭矩 Peak Torque	扭矩常数 Torque Constant
单位 Unit	rpm	Nm	Kw	A	V	Nm	Nm/A
U1008Y203	2000	114	24	47.3	366	255	2.71
U1010Y173	1700	135	24	48	360	310	3.22
U1010Y203	2000	138	28.8	56.2	350	310	2.74
U1013Y203	2000	186	38.9	74.7	377	410	2.78
U1315Y203	2000	221	46.2	115.4	363	363	2.31
U1320Y173	1700	262	46.6	102	390	550	3.08
U1320Y203	2000	301	63	147.9	391	550	2.46
U1325Y173	1700	369	65.7	145.1	408	675	3.08
U1330Y153	1500	425	66.8	173.1	320	830	2.89
U1340Y153	1500	567	89.1	208	355	1100	3.21
U18050Y153	1500	662	104	175	380	1795	4.3
U18070Y153	1500	1025	161	344	380	3482	3.36
U18100Y153	1500	1337	210	382	380	4643	4.03

菲仕内嵌(风冷)参数表

PHASE Embedded (air cooling) Parameters

电机型号 Motor Model	额定转速 Rated speed	额定扭矩 Rated torque	额定功率 Rated Power	额定电流 Rated Current	电压等级 Rated Voltage	峰值扭矩 Peak Torque	扭矩常数 Torque constant	转动惯量 Inertia with brake Opeion	额定频率 Rated Frequncy
单位 Unit	rpm	Nm	kW	A	V	Nm	Nm/A	Kg*cm²	Hz
E1004F15.3	1500	50	7.9	15	380	145	3.43	56	100
E1004F17.3	1700	50	8.9	17	380	145	2.91	56	113
E1004F20.3	2000	50	10	19	380	145	2.57	56	133
E1005F15.3	1500	75	12	23	380	222	3.38	80	100
E1005F17.3	1700	74	13	26	380	222	2.86	80	113
E1005F20.3	2000	73	15	29	380	222	2.60	80	133
E1007F15.3	1500	100	16	29	380	297	3.46	103	100
E1007F17.3	1700	99	18	32	380	297	3.12	103	113
E1007F20.3	2000	97	20	38	380	297	2.60	103	133
E1008F15.3	1500	124	20	39	380	371	3.25	126	100
E1008F17.3	1700	123	22	41	380	371	3.03	126	113
E1008F20.3	2000	121	25	47	380	371	2.60	126	133
E1010F15.3	1500	148	23	45	380	445	3.38	150	100
E1010F17.3	1700	146	26	52	380	445	2.86	150	113
E1010F20.3	2000	143	30	56	380	445	2.60	150	133
E1012F15.3	1500	171	27	52	380	520	3.33	173	100
E1012F17.3	1700	168	30	57	380	520	3.03	173	113
E1012F20.3	2000	165	34	69	380	520	2.42	173	133
E1013F15.3	1500	193	30	57	380	594	3.46	196	100
E1013F17.3	1700	190	34	62	380	594	3.12	196	113
E1013F20.3	2000	187	39	69	380	594	2.77	196	133
E1215F15.3	1500	206	32	64	380	467	3.27	253	100
E1215F17.3	1700	203	36	70	380	467	2.98	253	113
E1215F20.3	2000	197	41	75	380	467	2.67	253	133
E1220F15.3	1500	255	40	78	380	585	3.34	310	100
E1220F17.3	1700	250	45	86	380	585	2.98	310	113
E1220F20.3	2000	243	51	95	380	585	2.60	310	133
E1225F15.3	1500	300	47	86	380	700	3.57	370	100
E1225F17.3	1700	294	52	96	380	700	3.13	370	113
E1225F20.3	2000	285	60	109	380	700	2.67	370	133
E1230F15.3	1500	351	55	100	380	800	3.64	427	100
E1230F17.3	1700	344	61	114	380	800	3.13	427	113
E1230F20.3	2000	336	70	134	380	800	2.60	427	133
E1235F15.3	1500	395	62	115	380	920	3.57	485	100
E1235F17.3	1700	387	69	135	380	920	2.98	485	113
E1235F20.3	2000	377	79	164	380	920	2.38	485	133
E1240F15.3	1500	439	69	136	380	1035	3.35	-	100
E1240F20.3	200	423	89	169	380	1035	2.68	-	133

电机型号 Motor Model	额定转速 Rated speed	额定扭矩 Rated torque	额定功率 Rated Power	额定电流 Rated Current	额定电压 Rated Voltage	峰值扭矩 Peak Torque	扭矩常数 Torque constant
单位 Unit	rpm	Nm	kW	A	V	Nm	Nm/A
E1806F103	1000	592	62	120	380	1270	4.76
E1806F123	1200	584	73.4	138	380	1254	3.58
E1806F153	1500	572	90	161	380	1141	3.4
E1808F103	1000	754	79	147	380	1420	4.83
E1808F123	1200	752	95	170	380	1434	4.23
E1808F153.	1500	704	110	203	380	1400	3.32
E1809F103	1000	878	92	175	380	1680	4.76
E1809F123	1200	845	106	198	380	1680	4.08
E1809F153	1500	842	132	237	380	1677	3.4
E1811F103	1000	1063	111	202	380	2040	4.97
E1811F123	1200	1055	133	243	380	2043	4.14
E1811F153	1500	1020	160	295	380	2040	3.41
E1813F103	1000	1221	127.9	240	380	2660	4.90
E1813F123	1200	1200	150.8	295	380	2627	3.92
E1813F153	1500	1175	185	327	380	2303	3.44
E1815F103	1000	1344	140.7	255	380	2999	5.09
E1815F123	1200	1316	165.4	321	380	3000	3.96
E1815F153	1500	1275	200	360	380	2550	3.40
E1817F103	1000	1470	153.9	270	380	3545	5.34
E1817F153	1500	1405	220	415	380	2830	3.33

菲仕内嵌(油冷)参数表

PHASE Embedded (Oil Cooling) Parameters

电机型号 Motor Model	额定转速 Rated speed	额定扭矩 Rated torque	额定功率 Rated Power	额定电流 Rated Current	额定电压 Rated Voltage	峰值扭矩 Peak Torque	扭矩常数 Torque constant
单位 Unit	rpm	Nm	kW	A	V	Nm	Nm/A
E1806Y103	1000	698	73.1	140	380	1285	4.76
E1806Y123	1200	686	86.2	170	372	1283.5	3.85
E1806Y153	1500	678	106.5	204	382	1288	3.17
E1806Y173	1700	664	118.2	233	369	1240	2.71
E1808Y103	1000	902.8	94.5	190	365	1663	4.53
E1808Y123	1200	906	113.8	220	378	1664	3.93
E1808Y153	1500	893	140.3	282	360	1658	3.02
E1809Y103	1000	1042.5	109.2	209	380	1897	4.76
E1809Y123	1200	1038	130.4	265	360	1895	3.74
E1809Y153	1500	1017	159.7	317	365	1860	3.06
E1809Y173	1700	1001	178.2	351	368	1856	2.72
E1811Y123	1200	1235	155.2	287	380	2360	4.13
E1811Y153	1500	1267	199	365	380	2291	3.32
E1811Y173	1700	1238	220.4	410	380	2360	2.89
E1811Y123	1200	1468	184.5	359	372	2790	3.90
E1813Y153	1500	1442	226.5	403	410	2694	3.44
E1815Y123	1200	1692	212.6	410	377	3220	3.94
E1815Y153	1500	1628	255.7	460	403	3124	3.40
E1815Y173	1700	1580	281.3	540	377	3240	2.83
E1817Y123	1200	1915	240.6	478	366	3648	3.83
E1817Y153	1500	1825	286.6	550	380	3534	3.21

表贴(U)型号说明/Surface Mount Model Description

U3 **10 07 F 20 3 R4 0 Y0 K b1**

电机基座识别：
03, 05, 07, 10, 13, 18

Size, (ap prox. shaft he ight in cm)
03 (Motor □75) ,05(Motor □100)
07(Motor □145) ,10(Motor □200)
13(Motor □264) ,18(Motor □360)

堵转时输出转矩：
03, 05, 07 识别数字即为所指 Nm
10, 13, 16, 18, 20 识别数字 *10 为所指 Nm

Locked rotor motor torque:
Nm for size:03,05,07
Nm*10 for size:10,13,18,20

冷却方式
A: 自然冷却
F: 风扇强制冷却
C: 水冷却

cooling :
A: natural convection, no field
F: servo fan cooling
C: water cooling

额定转速：
rpm 100

Nominal speed identifier :
rpm*100

额定转速下额定电压：
2:220/240 Vac
3:380/440 Vac
4:480/516 Vac

Nominal voltage at nominal speed identifier:
2:220/240 Vac
3:380/440 Vac
4:480/516 Vac

编码器：
N7:Endat 多圈绝对值编码器 (4096 圈 +19 位 / 转)
S1: 正余弦 2048 周 / 转 + 单圈绝对通道 (用于 5-20 系列电机)
R4: 旋转变压器 多摩川 TS2640N321E64
Z: 无传感器
.....

Sensor identifier:
N7: EnDat inductive absolute multi tur n(4096 rev +19 bit/rev
S1: Sincos 2048 cy/rev + single turn absolute track (for motor size 5...20)
R4: Resolver Tamagawa TS2640N321E64
Z: no sensor
.....

底板
b1: 菲仕标准底板
00: 无底板

Mounting feet:
b1:standard feet
00:without feet

转轴：
K: 带键槽，标准键
E: 光轴

shaft:
K:shaft with key
E:cylindrical shaft without key

接线方式：
YZ: 电源和信号航空插座
Y0: 信号航空插座和电源盒
00: 无航空插座

connection:
YZ:Power and signal circular connector
Y0:Signal circular connector and power box
00:No circular connector

安全制动器：
B: 带制动器
0: 不带制动器

Safety brake:
B:with brake
0:without brake

订购代码示例：
U3 10 07 F 30 3 R4 B Y0 K b1
电机为 10 号基座，约 70Nm，额定 3000rpm，380Vac，风扇冷却，旋变编码器 TS2640N321E64, 带安全制动器，信号航空插座，伸出轴带键槽，标准底板。

ORDER CODE EXAMPLE :
U3 10 07 F 30 3 R4 B Y0 K b1
Motor type U31007F30(70Nm,3000rpm), 380Vac, servo fan cooling, resolverTS2640N321E64, safety brake, signal circular connector only, with Key on shaft, standard feet.

内嵌(E)型号说明/Embedded (Air Cooling) Model Description

E 01007 F 20 3 R4 0 Y0 K b1 - T F

电机类型 Series Identify	框号 Size	冷却方式 Cooling	额定转速 Rated Speed	额定电压 Rated Voltage	编码器 Sensor Identify	制动器 Brake	接线方式 Connection	转轴 Shaft	底板 Mounting Feet	接线盒位置 Position of Terminal Box	出线孔方向 Direction of Cable Hole

1004, 1005, 1007, 1008, 1010, 1012 1013,1215, 1220, 1225, 1230, 1235, 1806, 1808, 1809, 1811, 1813, 1805

F = 强制风冷
Fan cooling

数字 *100 = 1500 rpm, 2000 rpm

3 = 380 Vac

R4 = 旋转变压器，1 对极，BRX
Resolver, 1X - BRX

0 = 无制动器
Without brake

Y0 = 电源接线端子，信号航空插座
Signal circular connector

K = 带键槽，标准键
Shaft with key

00 = 无底板
Without feet
b1 = 标准底板
Standard feet

轴伸方向看
Look from the direction of shaft
T= 接线盒在上
Terminal box on top
L= 接线盒在左
Terminal box on the left
R= 接线盒在右
Terminal box on the right

F= 出线孔朝前
Cable hole in front
B= 出线孔朝后
Cable hole in the back

代码示例：
E01007F203R40Y0Kb1-TF
Express 0 系列，框号 1007，强制风冷，额定转速 2000rpm，电压等级 380Vac，旋转变压器，1 对极，BRX，无制动器，电源接线端子，信号航空插座，伸出轴带键，标准底板，轴伸方向看，接线盒朝上，出线孔朝前。

Code Example:
E01007F203R40Y0Kb1-TF
Express 0 series motor, size 1007, servo fan cooling, 2000rpm, 380Vac, resolver, 1X - BRX, without brake, signal circular connector, shaft with key, standard feet, look from the direction of motor shaft, terminal box on top, cable hole in front.

表贴(U)系列安装尺寸
Surface Mount series Installation dimensions

10F 系列标准轴电机尺寸图
Series standard shaft motor drawings

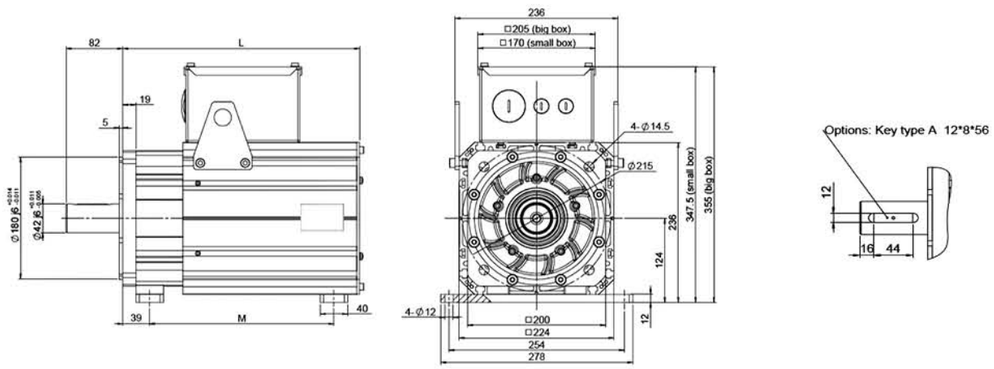

类型 /Type	U1004F	U1005F	U1007F	U1008F	U1010F	U1013F
M	267	285	312	354	396	471
L(Resolver R3,R4,etc)	338.5	377.5	413.5	446.5	487.5	554.5

13F 系列标准轴电机尺寸图
Series standard shaft motor drawings

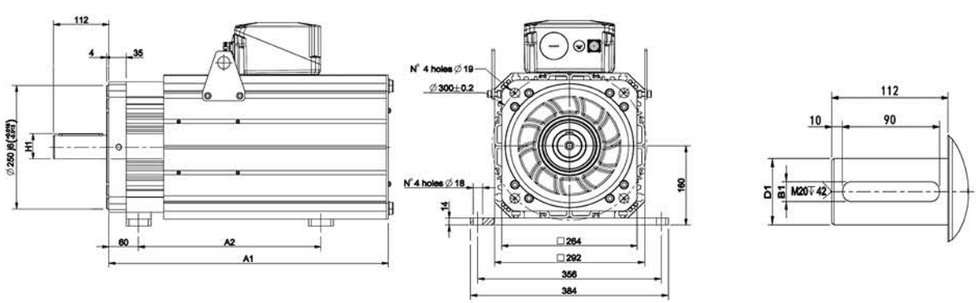

电机型号 Motor Model	A1		A2	ΦD1	B1	H1	KEY
	In ≤ 150A	In > 150A					
U1315F	513.5	553.5	360	48j8	14	51.5	14x9x90
U1320F	566.5	606.5	370	48j7	14	51.5	14x9x91
U1325F	620	660	476	48j8	14	51.5	14x9x92
U1330F	673.5	713.5	476	48j9(60m6)	14(18)	51.5(64)	14x9x93(18x11x90)
U1340F	780.5	820.5	583	60m6	18	64	18x11x90

内嵌(E)系列安装尺寸
Embedded series Installation dimensions

10F 系列标准轴电机尺寸图
Series standard shaft motor drawings

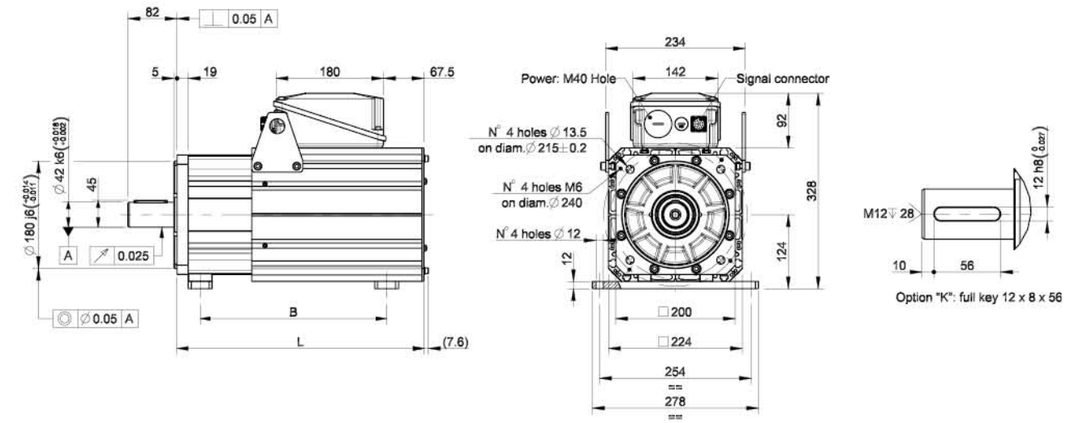

类别/Type	E1004F	E1005F	E1007F	E1008F	E1010F	E1012F	E1013F
B	267	285	312	354	396	400	471
L	341.5	377.5	413.5	449.5	485.5	526.5	557.5

12F 系列标准轴电机尺寸
Series standard shaft motor drawings

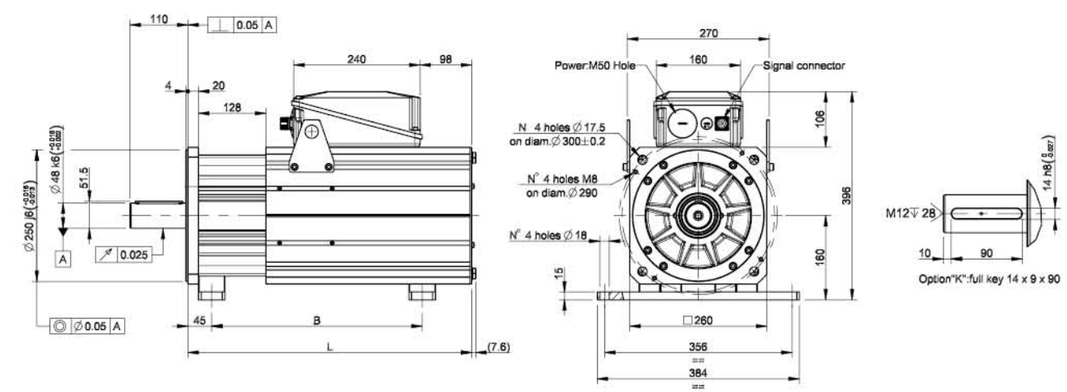

类别/Type	E1215F	E1220F	E1225F	E1230F	E1235F	E1240F
B	400	450	500	550	600	650
L	539	589	639	689	739	798

18F 内嵌系列标准轴电机尺寸图
Embedded Series standard shaft motor drawings

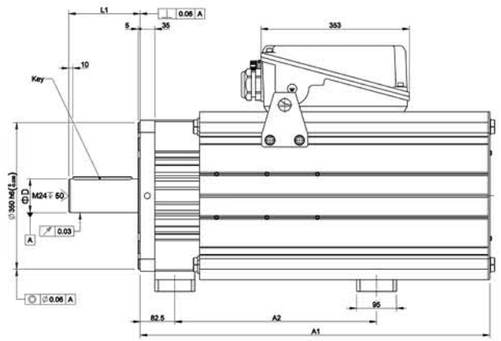

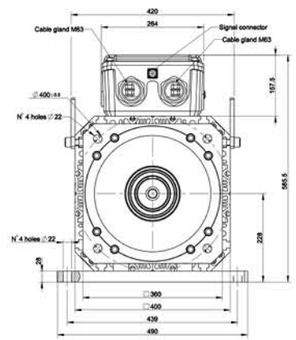

类别/Type	A1	A2	L1	D	KEY
E1806F	682	330	170	80m6	22×14×140
E1808F	742	390	170	80m6	22×14×140
E1809F	772	420	170	80m6	22×14×140
E1811F	832	480	170	80m6（90m6）	22×14×140（25×14×140）
E1813F	892	540	170	90m6	25×14×140
E1815F	962	610	170	90m6	25×14×140
E1817F	1012	660	170	90m6	25×14×140

ABT 伺服电机 Servo Motor

ABT电机是美国艾伯特流体动力有限公司（威斯克子公司）针对油电伺服的特性设计开发的高性能永磁同步伺服电机。

ABT Motor is a high-performance permanent magnetic synchronous servo motor developed by Albert Fluid Power Co., Ltd. (a subsidiary of NVICKS) for the design of the characteristics of oil-electric servo.

ABT 1004 E 15.3 (W) - G 5

- ABT：品牌 Brand
- 1004：电机规格 Motor specifications
- E：E: 内嵌磁钢 E: Embedded magnetic steel
- 15.3：额定转速÷100 Rated speed÷100
- (W)：风冷：不标示 wind cooling: Not labeled；W: 代表油冷 Representing oil cooling
- 3：3: 额定电压380V Rated voltage 380V；2: 额定电压220V Rated voltage 220V
- G：B: 标准/standard；G: 增强型 high power
- 5：额定转速 Rated speed 1:1000r/min 5:1500r/min 7:1700r/min 8:1800r/min 2:2000r/min

伺服电机参数表（风冷）
Servo motor parameter table（air cooling）

电机型号 Motor Model	额定扭矩 Rated Torque	额定转速 Rated Speed	额定电流 Rated Current	额定功率 Rated Power	扭矩常数 Torque Constant	额定电压 Rated Voltage
单位 Unit	Nm	rpm	A	Kw	Nm/A	V
ABT1004E15.3-G5	45	1500	13.6	7.1	3.31	380
ABT1004E17.3-G7	45	1700	15.1	8	2.98	380
ABT1004E20.3-G2	45	2000	16.6	9.4	2.71	380
ABT1005E15.3-B5	55	1500	16.3	8.6	3.37	380
ABT1005E17.3-B7	55	1700	18.5	9.8	2.97	380
ABT1005E20.3-B2	54	2000	21.0	11.3	2.57	380
ABT1005E15.3-G5	68	1500	21.6	10.7	3.14	380
ABT1005E17.3-G7	65	1700	21.3	11.5	3.05	380
ABT1005E20.3-G2	65	2000	24.8	13.6	2.62	380
ABT1007E15.3-B5	71	1500	20.9	11.2	3.40	380
ABT1007E17.3-B7	70	1700	22.5	12.5	3.10	380
ABT1007E20.3-B2	70	2000	24.1	14.6	2.89	380
ABT1007E15.3-G5	90	1500	28.2	14.1	3.19	380
ABT1007E17.3-G7	84	1700	28.3	15.0	2.97	380
ABT1007E20.3-G2	82	2000	31.6	17.4	2.59	380
ABT1008E15.3-B5	94	1500	27.6	14.7	3.26	380
ABT1008E17.3-B7	94	1700	29.5	16.7	3.05	380
ABT1008E20.3-B2	92	2000	32.6	19.2	2.82	380
ABT1008E15.3-G5	114	1500	35.5	17.9	3.21	380
ABT1008E17.3-G7	105	1700	35.3	18.7	2.97	380
ABT1008E20.3-G2	104	2000	38.3	21.8	2.72	380
ABT1010E15.3-B5	110	1500	32.6	17.3	3.37	380
ABT1010E17.3-B7	110	1700	35.7	19.6	3.08	380
ABT1010E20.3-B2	112	2000	39.8	23.4	2.81	380
ABT1010E15.3-G5	135	1500	42.5	21.2	3.18	380
ABT1010E17.3-G7	129	1700	44.8	23.0	2.88	380
ABT1010E20.3-G2	129	2000	50.3	27.0	2.56	380
ABT1012E15.3-G5	144	1500	43.8	22.6	3.20	380
ABT1012E17.3-G7	144	1700	46.0	25.6	3.04	380
ABT1012E20.3-G2	137	2000	49.8	28.7	2.75	380

电机型号 Motor Model	额定扭矩 Rated Torque	额定转速 Rated Speed	额定电流 Rated Current	额定功率 Rated Power	扭矩常数 Torque Constant	额定电压 Rated Voltage
单位 Unit	Nm	rpm	A	Kw	Nm/A	V
ABT1013E15.3-B5	156	1500	44.7	24.5	3.49	380
ABT1013E17.3-B7	156	1700	53.3	27.8	2.93	380
ABT1013E20.3-B2	155	2000	60.9	32.5	2.55	380
ABT1013E15.3-G5	180	1500	52.0	28.3	3.46	380
ABT1013E17.3-G7	178	1700	64.8	31.7	2.75	380
ABT1013E20.3-G2	174	2000	66.8	36.4	2.60	380
ABT1015E15.3-G5	205	1500	61.8	32.2	3.32	380
ABT1015E17.3-G7	205	1700	70	36.5	2.93	380
ABT1015E20.3-G2	195	2000	74	40.8	2.64	380
ABT1315E15.3-G5	215	1500	63	33.8	3.41	380
ABT1315E17.3-G7	218	1700	74	38.8	2.95	380
ABT1315E20.3-G2	207	2000	81.5	43.4	2.54	380
ABT1320E15.3-G5	250	1500	80.0	39.3	3.12	380
ABT1320E17.3-G7	247	1700	83.5	44.0	2.96	380
ABT1320E20.3-G2	243	2000	91.6	50.8	2.65	380
ABT1325E15.3-G5	310	1500	97.6	48.6	3.23	380
ABT1325E17.3-G7	295	1700	101.0	52.4	2.97	380
ABT1325E20.3-G2	280	2000	104.0	58.6	2.69	380
ABT1328E15.3-G5	338	1500	103	53.1	3.30	380
ABT1328E17.3-G7	336	1700	110	59.8	3.05	380
ABT1328E20.3-G2	330	2000	125	69.1	2.65	380
ABT1330E15.3-G5	375	1500	107.1	58.9	3.50	380
ABT1330E17.3-G7	369	1700	122.9	65.7	3.00	380
ABT1330E20.3-G2	364	2000	145.5	76.2	2.50	380
ABT1340E15.3-G5	455	1500	140.3	71.5	3.60	380
ABT1340E17.3-G7	450	1700	166.5	80.1	3.00	380
ABT1340E20.3-G2	423	2000	167.0	88.6	2.53	380
ABT1345E15.3-G5	500	1500	166.5	78.5	3.34	380
ABT1345E17.3-G7	492	1700	172.0	87.5	2.85	380
ABT1345E20.3-G2	488	2000	203.2	102.2	2.67	380
ABT1350E15.3-G5	545	1500	166	85.6	3.28	380
ABT1350E17.3-G7	540	1700	183	96.1	2.95	380
ABT1350E20.3-G2	530	2000	203	111	2.62	380
ABT1806E10.3	649	1000	133	68	4.88	380
ABT1806E15.3	636	1500	205	100	3.10	380
ABT1806E20.3	622	2000	270	130	2.31	380
ABT1808E10.3	777	1000	167	81	4.66	380
ABT1808E15.3	762	1500	240	120	3.18	380
ABT1808E20.3	750	2000	320	157	2.35	380
ABT1809E10.3	900	1000	179	94	5.03	380
ABT1809E15.3	882	1500	273	139	3.23	380
ABT1809E20.3	865	2000	370	181	2.38	380
ABT1811E10.3	1040	1000	199	109	5.23	380
ABT1811E15.3	1020	1500	315	160	3.24	380
ABT1811E20.3	990	2000	405	207	2.45	380

伺服电机参数表（油冷）
Servo motor parameter table（oil cooling）

电机型号 Motor Model	额定扭矩 Rated Torque	额定转速 Rated Speed	额定电流 Rated Current	额定功率 Rated Power	扭矩常数 Torque Constant	额定电压 Rated Voltage
单位 Unit	Nm	rpm	A	Kw	Nm/A	V
ABT25-225-15.3W	247	1500	72.5	38.9	3.41	380
ABT25-225-17.3W	251	1700	85.1	44.6	2.95	380
ABT25-225-20.3W	238	2000	93.7	49.9	2.54	380
ABT25-300-15.3W	336	1500	100.1	52.8	3.36	380
ABT25-300-17.3W	324	1700	109.3	57.7	2.97	380
ABT25-300-20.3W	322	2000	119.6	67.4	2.69	380
ABT25-370-15.3W	425	1500	126.5	66.8	3.36	380
ABT25-370-17.3W	417	1700	144.9	74.3	2.88	380
ABT25-370-20.3W	414	2000	164.5	86.7	2.52	380
ABT25-440-15.3W	493	1500	144.9	77.5	3.41	380
ABT25-440-17.3W	491	1700	167.9	87.4	2.92	380
ABT25-440-20.3W	486	2000	192.1	101.9	2.53	380
ABT25-500-15.3W	566	1500	167.9	88.9	3.37	380
ABT25-500-17.3W	558	1700	193.2	99.2	2.89	380
ABT25-500-20.3W	554	2000	208.2	116.2	2.66	380
ABT25-560-15.3W	627	1500	190.9	98.4	3.28	380
ABT25-560-17.3W	621	1700	210.5	110.5	2.95	380
ABT25-560-20.3W	610	2000	233.5	127.7	2.62	380
ABT30-540-10.3W	580	1000	110	60.7	5.27	380
ABT30-540-15.3W	550	1500	155	86.3	3.55	380
ABT30-540-20.3W	515	2000	200	108	2.58	380
ABT30-700-10.3W	750	1000	144	78.5	5.21	380
ABT30-700-15.3W	710	1500	200	111	3.55	380
ABT30-700-20.3W	660	2000	254	138	2.60	380
ABT30-875-10.3W	955	1000	174	100	5.49	380
ABT30-875-15.3W	900	1500	260	141	3.46	380
ABT30-875-20.3W	840	2000	335	175	2.51	380
ABT30-1050-10.3W	1130	1000	215	118	5.26	380
ABT30-1050-15.3W	1080	1500	305	170	3.54	380
ABT30-1050-20.3W	1000	2000	425	209	2.35	380
ABT30-1250-10.3W	1310	1000	245	137	5.35	380
ABT30-1250-15.3W	1250	1500	366	196	3.42	380
ABT30-1250-20.3W	1170	2000	452	245	2.59	380
ABT30-1400-10.3W	1500	1000	280	157	5.36	380
ABT30-1400-15.3W	1430	1500	455	224	3.14	380
ABT30-1400-20.3W	1350	2000	570	282	2.37	380

ABT 内嵌系列安装尺寸（风冷）
Embedded series Installation dimensions（air cooling）

ABT10 系列/Series

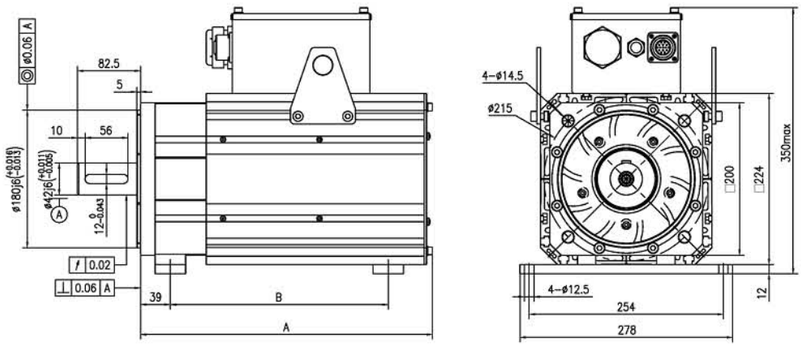

电机型号 Model	ABT1004E-G ABT1005E-B	ABT1005E-G	ABT1007E-B ABT1007E-G	ABT1008E-B ABT1008E-G	ABT1010E-B ABT1010E-G	ABT1012E-G ABT1013E-B	ABT1013E-G	ABT1015E-G
A [mm]	345	361	381	417	453	489	525	575
B [mm]	265	265	285	310	350	395	395	470

ABT13 系列/Series

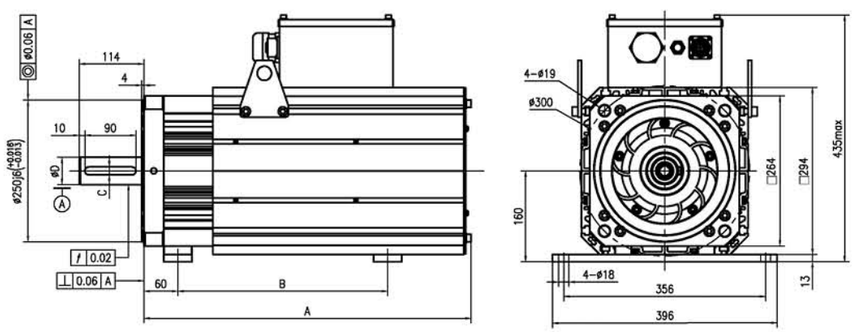

电机型号 Model	ABT1315E	ABT1320E ABT1325E	ABT1328E ABT1330E	ABT1340E	ABT1345E	ABT1350E
A[mm]	523.5	577	630.5	684	757.5	811
B [mm]	365.5	419	472.5	526	599.5	653
C [mm]	$14^{0}_{-0.027}$	$14^{0}_{-0.027}$	$14^{0}_{-0.027}$	$14^{0}_{-0.027}$	$18^{0}_{-0.027}$	$18^{0}_{-0.027}$
D [mm]	$48^{+0.011}_{-0.005}$	$48^{+0.011}_{-0.005}$	$48^{+0.011}_{-0.005}$	$48^{+0.011}_{-0.005}$	$60^{+0.03}_{+0.011}$	$60^{+0.03}_{+0.011}$

ABT18 系列/Series

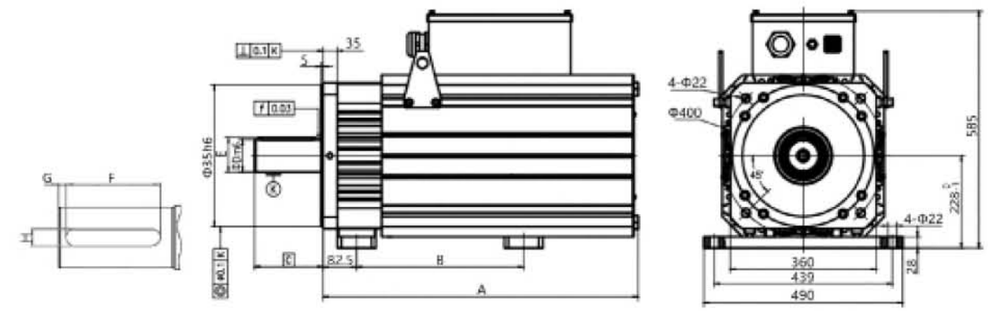

电机型号 Model	A[mm]	B[mm]	C[mm]	D[mm]	E[mm]	F[mm]	G[mm]	H[mm]
ABT1806E	777	412	170	80	85	140	11	22
ABT1808E	783	472	170	80	85	140	11	22
ABT1809E	897	532	170	80	85	140	11	22
ABT1811E	957	592	170	90	95	140	11	25

ABT 内嵌系列安装尺寸（油冷）
Embedded series Installation dimensions（oil cooling）

ABT25 系列/Series

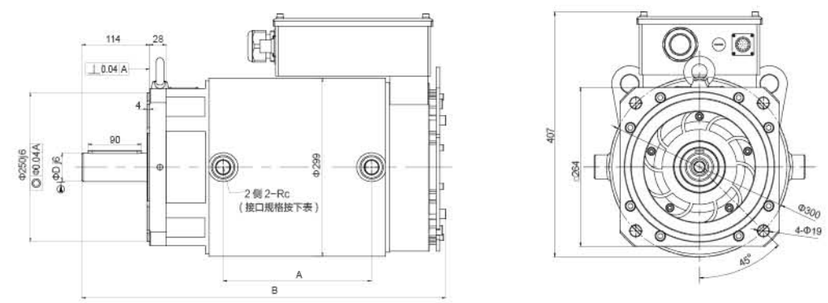

型号/Model	ABT25-225	ABT25-300	ABT25-370	ABT25-440	ABT25-500	ABT25-560
A	143	197	250	304	357	411
B	503	557	610	664	737	791
Rc	Rc1/2	Rc1/2	Rc1/2	Rc3/4	Rc3/4	Rc3/4
D	48	48	48	48	60	60

ABT30 系列/Series

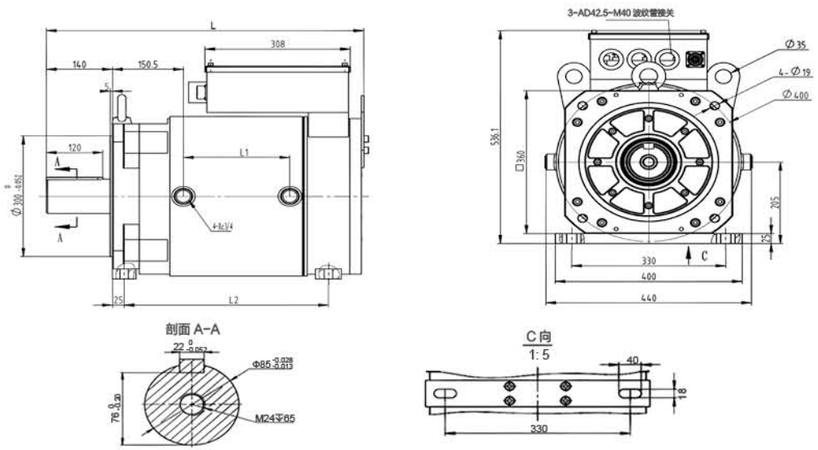

型号/Model	ABT30-540	ABT30-700	ABT30-875	ABT30-1050	ABT30-1250	ABT30-1400
L (mm)	621	673	725	777	829	881
L1 (mm)	174	226	278	330	382	434
L2 (mm)	381	438	485	537	589	641

压力传感器/Pressure sensor

美国NVK压力传感器是基于放置在不锈钢膜片上的薄膜敏感元件技术，采用最新瑞士Metallux 芯片和紧凑不锈钢构造，使传感器非常坚固和可靠，适用于高压冲击、震动、高低温的恶劣液体条件中，如注塑机、压铸机、油压机等。

The American NVK pressure sensor is based on the thin-film sensor technology placed on the stainless steel diaphragm. It adopts the latest Swiss Metallux chip and compact stainless steel structure, making the sensor very sturdy and reliable, suitable for harsh liquid conditions with high shock, vibration, pressure and temperature shock fluid, such as injection molding machine, die-casting machine, hydraulic press, etc.

规格说明
Specifications

压力量程/Pressure range: 0-400bar
测量精度/Measurement accuracy: ±0.25%
输出信号/Output signal: 0-10Vdc
供电电源/Power supply: 12-33Vdc
安装接口/Installation interface: G1/4
连接针脚/Connection pins: 1+，2-，3 signal

伺服配套方案/Servo Matching Solutions

整套伺服系统命名规则/The whole set of servo system naming rules

VG50	ABT1008F	ABT18.5KW	RS
油泵品牌规格	电机品牌规格	驱动品牌规格	系统装配方向
Oil pump brand and specifications	Servo motor brand and specifications	Servo driver brand and specifications	System assembly direction

系统装配方向命名规则/direction of system assembly naming rules

系统方向同两个字母组成
第一个字母代表油泵吸油口方向
第二个字母代表电机接线盒方向

The system direction is composed of two letters
The first letter represents the direction of the suction port of the oil pump
The second letter represents the direction of the motor junction box

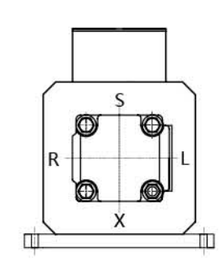

油泵吸油口方向
Direction of oil pump suction port

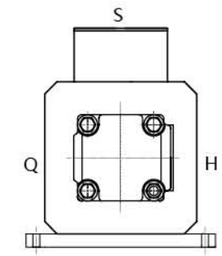

电机接线盒方向
Motor terminal box direction

选配组合方案/Optional combination plan

方案 Plan	油泵 Pump	伺服电机 Servo Motor	驱动器 Driver	型号 Model number
1	**VG** 齿轮泵/gear pump	ABT	ABT	VG1-50-ABT1007E-ABT15KW-RS
2	**VG** 齿轮泵/gear pump	ABT	台达/Delta	VG1-50-ABT1007E-台达/Delta 15KW-RS
3	**VG** 齿轮泵/gear pump	菲仕/Phase	ABT	VG1-50-E1007F-ABT15KW-RS
4	**VG** 齿轮泵/gear pump	菲仕/Phase	台达/Delta	VG1-50-E1007F-台达/Delta 15KW-RS
5	**ABT** 伺服叶片泵/servo vane pump	ABT	ABT	ABT1-50-ABT1007E-ABT15KW-RS
6	**ABT** 伺服叶片泵/servo vane pump	ABT	台达/Delta	ABT1-50-ABT1007E-台达/Delta 15KW-RS
7	**ABT** 伺服叶片泵/servo vane pump	菲仕/Phase	台达/Delta	ABT1-50-E1007F-台达/Delta 15KW-RS
8	**ABT** 伺服叶片泵/servo vane pump	菲仕/Phase	ABT	ABT1-50-E1007F-ABT15KW-RS
9	住友齿轮泵/Sumitomo gear pump	ABT	ABT	QT52-50-ABT1007E-ABT15KW-RS
10	住友齿轮泵/Sumitomo gear pump	ABT	台达/Delta	QT52-50-ABT1007E-台达/Delta 15KW-RS
11	住友齿轮泵/Sumitomo gear pump	菲仕/Phase	台达/Delta	QT52-50-E1007F-台达/Delta 15KW-RS
12	住友齿轮泵/Sumitomo gear pump	菲仕/Phase	ABT	QT52-50-E1007F-ABT15KW-RS
13	艾可勒齿轮泵/Eckerle gear pump	ABT	台达/Delta	Eipc3-50-ABT1007E-台达/Delta 15KW-RS
14	艾可勒齿轮泵/Eckerle gear pump	菲仕/Phase	台达/Delta	Eipc3-50-E1007F-台达/Delta 15KW-RS

备注：1. 下单型号以常用的50cc油泵，匹配18.5kw电机和驱动为例。
Remarks: 1. The order model takes the commonly use 50cc oil pump, matching 18.5kw motor and drive as an example.

伺服系统配置表/Servo system configuration table

油泵型号 pump model	泵托架型号 Pump bracket model	联轴器型号 Coupling model	电机型号 Motor model
EIPC3	BTJ-X1	DL80/42b-25	U10 ABT10
EIPC5	BTJ-X2	DL95/42b-32	
EIPC6	BTJ-X6	DL95/42b-40	
	BTJ-X7	DL95/48b-40	U13 ABT13
QT42	BTJ-X1	DL95/42b-32	U10 ABT10
QT52	BTJ-X2	DL95/42b-40	
QT62	BTJ-X6	DL95/42b-40	
	BTJ-X7	DL95/48b-50	U13 ABT13
ABT1TZ0	BTJ-X1	DL80/42b-32	U10 ABT10
ABT1T	BTJ-X2	DL80/42b-25	
ABT11T			
ABT1TZ1		DL95/42b-40	
ABT2T	BTJ-X6	DL95/42b-40	
ABT21T			
ABT22T			
ABT2TZ2		DL95/42b-50	
ABT2T	BTJ-X7	DL95/48b-40	U13 ABT13
ABT21T			
ABT22T			
ABT2TZ2		DL95/48b-50	
VG0	BTJ-X0	DL80/42b-20	U10 ABT10
VG00			
VG1	BTJ-X1	DL80/42b-25	
VG10			
VG11			
VG2	BTJ-X6	DL95/42b-40	
VG21			
VG22			
VG2	BTJ-X7	DL95/48b-40	U13 ABT13
VG21			
VG22			

可根据上述产品和客户需求进行配套方案
According to customer demand for supporting programs

VG系列齿轮泵
VG Series gear pump

美国艾伯特(ABT)伺服叶片泵
American Albert (ABT) servo vane pump

T7-E系列伺服叶片泵
T7-E Series servo vane pump

艾可勒齿轮泵
Eckerle gear pump

住友齿轮泵
Sumitomo gear pump

美国艾伯特(ABT)伺服电机
American Albert (ABT) servo motor

菲仕电机
Phase servo motor

美国艾伯特(ABT)驱动
American Albert (ABT) servo driver

台达驱动
Delta servo driver

科霸电脑
KEBA Computer

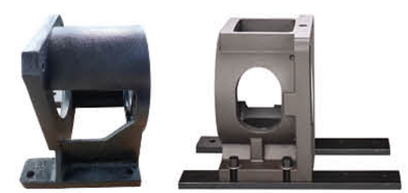

落地卧式托架
Horizontal bracket

立式托架
Vertical bracket

电机落地托架
Motor mounting bracket

联轴器
Coupling

美国NVK压力传感器
American NVK Pressure sensor

杰弗伦压力传感器
GEFRAN Pressure sensor

航插编码线
Aerial insertion coding line

进出油口法兰
Inlet and outlet flanges

科霸电脑/KEBA Computer

可扩展的KePlast 产品范围
The scalable KePlast product range

无论简单的液压注塑机还是复杂的多组件设备（带有深加工机械手），KePlast控制系统都能应对。

From simple hydraulic injection molding machines to complex multi-component systems with process-integrated robotics - KePlast control systems cover the entire range of applications.

i1000、i2000和i8000系列控制系统因精准性高、生产率高而出类拔萃，并且节能。整套软件和可扩展的硬件 - 无论在控制性能还是操作方面都具有最大的灵活性。在可视化方面也使用相同元素，在整个范围内确保统一的可视化操作。

The control systems of the i1000, i2000 and i8000 series stand out thanks to their precision and high productivity and ensure savings in energy consumption. The common software platform and the scalable hardware-both in control performance and in the operating unit-provide maximum flexibility. Identical elements are also used for visualization in order to ensure uniform visual operation over the entire range.

KePlast i2000

i2000系列硬件由一个性能等级可调的高性能单板控制器组成。I/O模块或电子驱动装置通过集成的高速实时EtherCAT总线联结。

The hardware of the i2000 series consists of a highperformance single-board computer with scalable performance level. I/O modules or electric drives are connected via the integrated high-speed real-time EtherCAT bus.

·用于液压、混合和全电动注塑机
·基于IntelAtom处理器上的模块化硬件
·高性能的EtherCAT界面
·12英寸SVGA至15英寸XGA TFT显示屏，纵向和横向规格
·触摸屏操作
·无缝集成KEBA驱动技术包括全电动注塑机应用包
·全面的质量数据包

·For hydraulic, hybrid and all-electric injection molding machines
·Modular hardware based on Intel Atom
·High-performance EtherCAT interface
·12" SVGA to 15" XGA TFT displays in portrait and landscape format
·Operation via touchscreen
·Seamless integration of the KEBA drive technology incl. application package for all-electric injection molding machines
·Comprehensive quality data package

KePlast i1000

KePlast控制系统i1000源于强大的稳定的控制核心，保证了生产中的稳定与高效。

Owing to its powerful computer core, the KePlast control system i1000 is real-time-capable, thereby enabling a continuously controlled quality of production.

·适用于标准的液压注塑机
·超致密型单板控制器
·7至12英寸显示屏
·微动开关操作
·注射闭环，包括通过注射图监控
·SPC软件包（流程控制统计）
·CAN总线扩展
·通过Ethernet接口实现互联

·For hydraulic standard injection molding machines
·Ultracompact single-board computer
·7" to 12" TFT displays
·Operation via microswitch keyboard
·Closed-loop injection process including monitoring by means of injection graphic
·SPC package (Statistic Process Control)
·Expandable via CAN bus
·Network-compatible through Ethernet connection

KePlast i8000

i8000系列控制解决方案提供了最高的控制器性能 和最大的灵活性。 整个程序包基于Lim蚁，最先进的手势操作和开放的控制平台结合在一起，提供最大程度的个性化。

The control solution of the i8000 series offers the very latest multitouch technology in combination with top performance. The Linux-based complete package combines state-of-the-art gesture operation with an open control platform and provides maximum individuality.

·用于液压、混合和全电动多组件注塑机以及大型设备
·开放式 Linux 控制平台，最短控制周期
·带有 Linux 操作系统和JavaFx技术的有效操作单元
·纵向模式的15寸和21.5寸宽屏显示器
·通过EtherCAT界面无缝集成KEBA驱动技术

·For hydraulic, hybrid and all-electric multicomponent injection molding machines as well as high tonnage IMMs
·Open Linux control platform with extremely short control cycles
·Active operating unit with Linux operating system and JavaFx technology
·15" and 21.5" multitouch widescreen displays in portrait format
·Seamless integration of KEBA drive technology via EtherCAT interface

Notes