引进 创新 超越
IMPORTING INNOVATION EXCELLING

宁波威克斯液压有限公司
NINGBO VICKS HYDRAULIC CO.,LTD.

地址：浙江省宁波市奉化区溪口镇后旺南路一号
Add: No.1, South Houwang Road, Xikou Zone, Fenghua, Ningbo, Zhejiang, China

公司总部/Domestic Sales：
Tel: 86-574-88901118 88900002
Fax: 86-574-88900007
Email: vicksxia@163.com
Http://www.nvicks.cn

国际业务部/International Sales：
Tel: 86-574-88876506
Fax: 86-574-88876505
Email: sales@hydnvicks.com

美国分公司：
地址：加利福尼亚州洛杉矶喜瑞都制鞋大道16300号
邮编：CA 90703
电话：909-594-1683

广东分公司：
东莞办地址：东莞寮步上屯良平西路142号
江门办地址：广东省江门鹤山市桃源镇桃源大道341号厂房三楼 (农商银行对面)
电话：0769-81101311
传真：0769-89610893

福建分公司：
地址：晋江市安海镇可慕恒安生活区2号楼104
电话：0595-85668821
传真：0595-85668821

成都分公司：
地址：成都市青白江区青江中路318号8栋1801
电话：18428160062

威克斯液压 VICKS HYDRAULIC

NINGBO VICKS HYDRAULIC CO.,LTD.

宁波威克斯液压有限公司

>>

LA4VSO series
LA10VSO 31 series
LA10VSO 32 series
LA10VO 52/53 series
LA11VO series

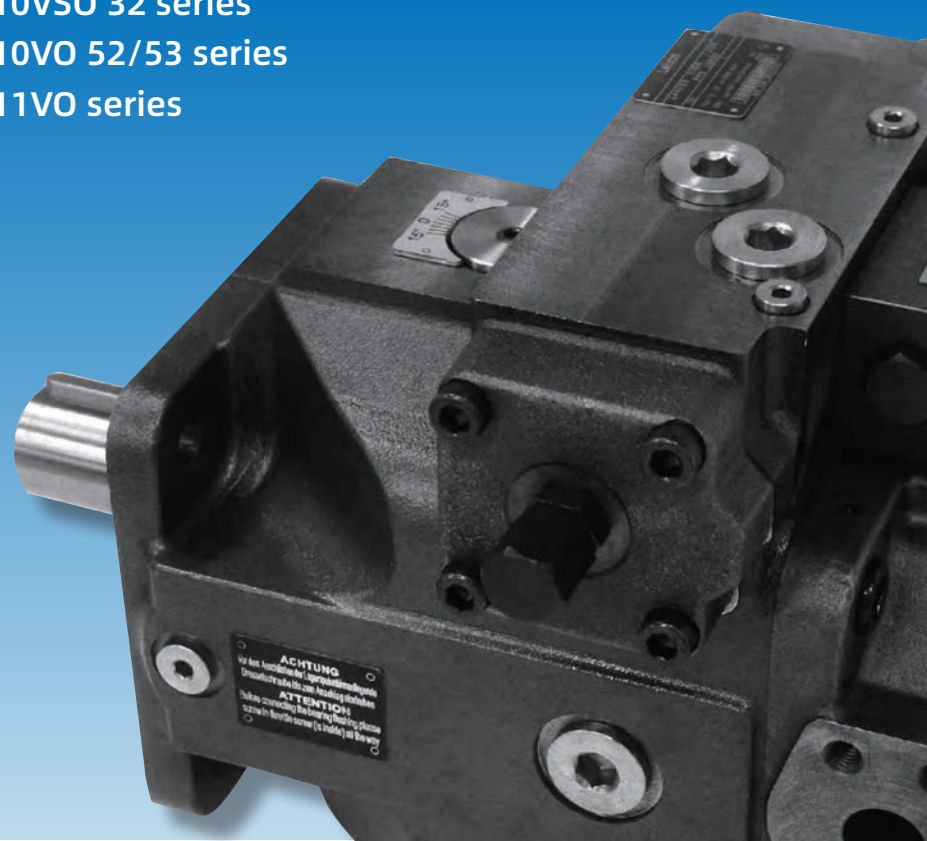

工厂实景/Factory Live-action

关于我们

宁波威克斯液压有限公司是上市公司鲍斯股份（股份代码：300441）控股子公司，创始于2007年，是一家拥有多项发明专利的国家高新技术企业，现有10条世界领先的液压泵生产检测流水线。年产液压泵15万多台，节能伺服系统1万多套，提供节能电储料成套解决方案（直驱驱控一体机、行星伺服一体机、齿轮箱伺服一体机）。

公司是叶片泵行业新标准修订主持单位，工信部专精特新“小巨人”企业；荣获中国液气密行业技术进步二等奖、区长质量奖和国家创新基金项目支持。

公司拥有VG系列超高压内啮合齿轮泵最高压力40Mpa、最高转速4000r/min，排量范围3-320ml/r，世界首创ABT系列伺服叶片泵，T6、T7、V、VQ、V10、V20、SQP、PV2R叶片泵，M3B、M4C、M4D、M4E、25/26M、35/36M、45/46M、50/51M叶片马达的核心技术，A4VSO, A10VSO31, A10VSO32, A10VO52/53, A11VO柱塞泵。产品通过中国CCS、挪威DNV、美国ABS、法国BV、英国LR、日本NKK等世界六大权威船级社认证，广泛应用在注塑橡塑、压铸、工程、船舶、农机、油压、打包、港口等机械行业。

公司是台湾台达、奥地利KEBA、菲仕电机、韵升股份、美的集团、日本住友的战略合作伙伴。

公司坚持引进、创新、超越的发展之路和优质、高效、低耗、安全的经营理念，致力于打造世界著名的液压泵制造商及伺服节能成套解决方案专家，为装备升级造“中国心脏”。

公司以学习、和谐、坚持、专业为企业文化的核心思想，倡导至真、至善、至美的价值观和开明开拓、和谐和乐的精神。

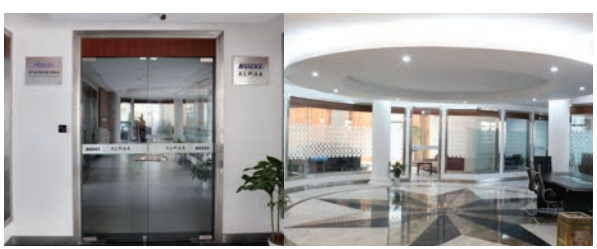
办公区/Office

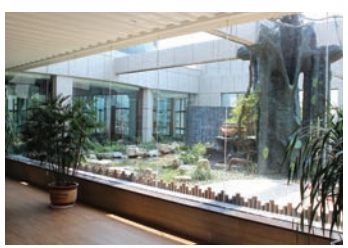
科研中心/Scientific Research Centre

ABOUT US

Ningbo Vicks Hydraulic Co., Ltd. is a holding subsidiary of the listed company Baosi Stock (stock code: 300441). It is founded in 2007. It is a national high-tech enterprise with a number of invention patents. There are 10 world leading production and testing lines for hydraulic pumps. With an annual output of more than 150,000 pcs hydraulic pumps, more than 10,000 sets energy-saving servo system, and supply complete solutions for electric melt glue energy-saving. (Direct drive integrated machine, Planetary reducer integrated machine, Gearbox servo integrated machine).

The company is the host of the revision of the new standard of the vane pump industry, praised by the Ministry of Industry and Information Technology as the new title "Little Giant" enterprise. We won the second prize of technology progress by China Hydraulics Pneumatics & Seals Association. Also we got the district mayor's quality award and the National Innovation Fund project support.

The company has core technology of VG series high pressure internal gear pumps (Max.Pressure 40Mpa, Max. Speed 4000r/min and Discharge range 3-320ml/r), World-first ABT series servo vane pumps, T6, T7, V, VQ, V10, V20, SQP, PV2R series vane pumps and M3B, M4C, M4D, M4E, 25/26M, 35/36M, 45/46M, 50/51M series vane motors, A4VSO, A10VSO31, A10VSO32, A10VO 52/53, A11VO piston pumps. Our products are certified by the world's top six authoritative classification societies such as Chinese CCS, Norway DNV, American ABS, French BV, British LS and Japan NKK, and are widely used in injection molding, die-casting, engineering, ships, agricultural machinery, hydraulic, packaging, ports and other machinery industries.

The company is strategic partner of Taiwan DELTA, Austria KEBA, PHASE motor, Yunsheng Group, Midea Group and SUMITOMO Pump.

Ningbo Vicks adheres to the development path of introduction, innovation and transcendence, and the business philosophy of high quality, high efficiency, low power consumption and safety, and is committed to building a world-renowned hydraulic pump manufacturer and servo energy-saving complete solution expert. We want to make a "Chinese heart" for industrial equip.


生活区/Staff Living Area


活动中心/Activity Center

Strategic Cooperative
战略合作

DELTA 台达 台湾台达	KEBA Automation by innovation. 奥地利科霸	PHASE MOTION CONTROL 菲仕电机	韵升集团 YUNSHENG GROUP
Midea 美的	SUMITOMO 日本住友	TRANSCYKO 台湾传仕重工	ALBERT American Albert Hydraulic 美国艾伯特(ABT)流体动力
CSIC China Shipbuilding 中船重工	中联重科 ZOOMLION	CAT 美国卡特彼勒	FINCM 法因股份
HAITIAN Drive Systems	力劲集团 L.K. GROUP	Golden Eagle Stock 金鹰股份	BORCHE 博创 博创智能装备
三川 SAN CHUN	KAI MING 佳明机器	金捷精机 Powerjet	LANSON Shaping The Quality 联升精密
TOPSTAR 拓斯达	UVA 甬华	TAIYIDE 台意德塑机	LS 乐星机械
TONGJIA 通佳	博纳机械 BONA MACHINERY	Delthi 德力士	WEIDA 伟达智能
HUYYOY 晋江火炬油压机械	ZHENGXI 成都正西	PHP 鹏达液压 Pengda Hydraulic Press	江东机械 JIANGDONGMACHINERY
Huade 华德液压	新佳盛 XINJIASHENG	LFK 梁发记	GST 康思达®

电储料成套解决方案

Complete Set Of Solutions For Electrical Storage Materials

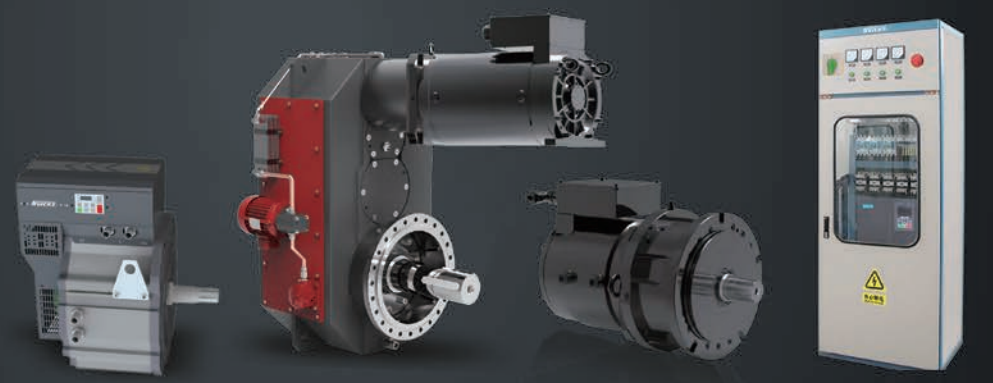

直驱 驱控一体机
Direct drive drive control integrated machine

变速箱伺服一体机
Gearbox servo integrated machine

行星伺服一体机
Planetary servo integrated machine

一体式控制柜
Integrated control cabinet

*详细资料请咨询公司工程技术人员

*Please consult the company's engineering and technical personnel for detailed information

Certification/ Honorary Certificate

认证/荣誉证书

科研合作高校/Cooperation of colleges

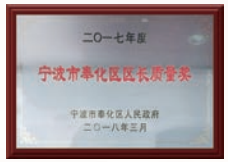

船级社认证 / Classification society certification

英国 / British LR

日本 / Japan NKK

Contents

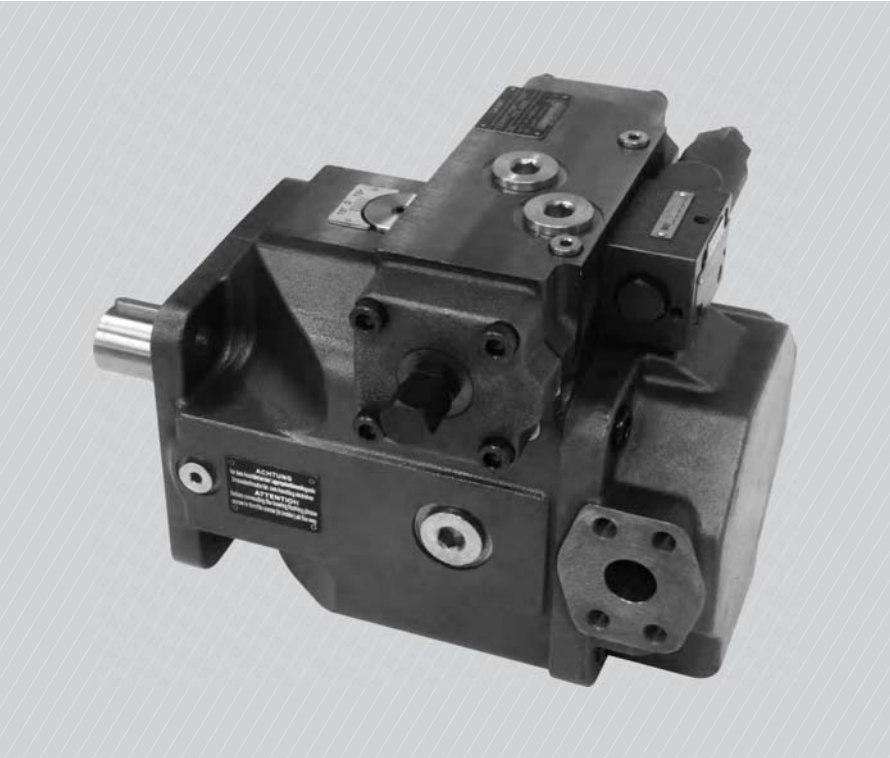

LA4VSO

轴向柱塞变量泵
Axial piston variable pump

适用于开式回路液压系统
Used for hydraulic drives in open loop ciruits

Features
Swashplate axial piston pump.
Adjust the angle of swashplate to realize the stepless variable.
Good suction characteristic.
Have the structural design of compact, light weight, low noise characteristics.
The sensitivity of control system.
Flow is proportional to the drivek speed and to the displacement.
Nominal pressure reach to 35 Mpa.
Long service life, high-precision bearings.
Hydrostatic balance slipper, improve the life of pump.
With swashplate angle indicator.

产品特点
斜盘轴向柱塞变量泵;
可通过调节斜盘角度来实现无级变量;
优异的吸入特性;
具备结构设计紧凑，重量轻，低噪音特点;
控制响应灵敏;
液压泵的流量正比于泵的转速和排量;
额定工作压力可达到35MPa;
选用长寿命，高精度轴承;
静压平衡滑靴提高使用寿命;
带斜盘角度指示器;

LA4VSO 轴向柱塞变量泵 Axial piston variable pump

订货型号 Ordering Code

L	-		A4VS	O			/			-					
液压 Hydraulic		液压油 Hydraulic fluid	轴向柱塞元件 Axial piston unit	工作模式 Type of operation	规格 Size	控制方式 Mode of operation		系列号 Series	旋转方向 Direction of rotation		密封件 Seals	轴伸 Shaft end	安装法兰 Mounting flange	工作油口 Service ports	通轴驱动 Through drive

型号说明 Model Description

液压 Hydraulic	L

液压油 Hydraulic fluid

矿物油 Mineral oils	无标识
HF流体 HF;HFB and HFC-Mediums	E

轴向柱塞元件 Axial piston unit

变量泵，斜盘结构，工业用途 Variable displacement pump, industrial uses	A4VS

工作模式 Type of operation

泵，开式回路 Pump,open circuits	O

规格 Size

△排量 Displacement Vg max(ml/r)	40	71	125	180	250	355	500	

控制方式 Mode of operation

压力控制 Pressure control	DR	√	√	√	√	√	√	√	DR...
按双曲线变化的功率控制 Power control with Hyperbolic open,curve	LR	√	√	√	√	√	√	√	LR...
手动控制 Manual control	MA	√	√	√	√	√	√	√	MA...
电控 Electronic control	EO	√	√	√	√	√	√	√	EO...
和压力有关的液压控制 Hydraulic control, pilot pressure dependent	HD	√	√	√	√	√	√	√	HD...

系列号 Series

	√	√	—	—	—	√	—	10
	—	—	√	√	√	√	√	22
	—	√	√	√	√	√	√	30

旋转方向 Direction of rotation

从轴端看 With view on shaft end	顺时针 Clockwise	R
	逆时针 Counterclockwise	L

密封件 Seals

丁腈橡胶 NBR Nitrile rubber	P
氟橡胶 FKM Fluoro-rubber	V

LA4VSO 轴向柱塞变量泵 Axial piston variable pump

轴伸 Shaft end

平键运动 Keyed parallel shaft	P
花键运动 Splined shaft	Z

安装法兰 Mounting flange	40	71	125	180	250	355	500	
ISO 4孔 (ISO 4 hole)	√	√	√	√	√	√	—	B

工作油口 Service ports

B口，S口 错 开90°；辅助油口B1为螺纹连接 Port B and port S 90°offset; auxiliary pressure port B1 Metric fixing screws	√	√	√	√	√	√	√	13
B口，S口 错 开90°；辅助油口B1为法兰连接 Port B and port S 90°offset; pressure connection B1 connected by flange	√	√	√	√	√	√	√	25

通轴驱动 Through drive

无辅助泵，无通轴驱动 Without auxiliary pump, without through drive	√	√	√	√	√	√	√	N00

注：√有货；△准备中；- 无货
Note: √Available; △in preparation; - not available

技术数据 Technical Data

性能参数（以下数据考虑机械效率及容积效率）
Performance parameters(these figures did not consider the efficiency of mechanical and volumetric efficiency)

规格 Size			40	71	125	180	250	355	500
排量 Displacement (Vg max)		cm^3/r	40	71	125	180	250	355	500
最高转速 Max.speed (n max1)		rpm	2600	2200	1800	1800	1500	1500	1320
最大流量 Max.Output flow	当 n=nmax	L/min	104	156	225	324	375	532	600
	当n=1500rpm	L/min	60	107	186	270	375	532	–
最大功率 Max.power	当n=nmax	kW	61	91	131	189	219	310	385
	当n=1500rpm	kW	35	62	109	158	219	310	–
最大扭距 Max.torque	（△P=35MPa）	N.m	223	395	696	1002	1391	1976	2783
扭距 Torque	（△P=10MPa）	N.m	64	113	199	286	398	564	795
重量（近似值）Weight(approximately)		kg	40	54	87	103	186	206	318

参数计算

流量 Flow $q_v = \frac{V_g \cdot n \cdot \eta_v}{1000}$ [L/min]

驱动扭矩 Drive torque $T = \frac{1,59 \cdot V \cdot \Delta p}{1000 \cdot \eta_{mh}}$ [N.m]

驱动功率 Drive power $P = \frac{2\pi \cdot T \cdot n}{60000} = \frac{T \cdot n}{9549} = \frac{q_v \cdot \Delta p}{600 \cdot \eta_t}$ [kW]

V_g =每转几何排量 Geometry displacement each rotate [cm^3]
Δp =压差 Pressuredrop/differential [bar]
n=转速 Rotary speed [rpm]
η_v =容积效率 Cubage's efficiency
η_{mh}=机械液压效率 Mehanical hydraulic efficiency
η_t =总效率（$\eta_t = \eta_v \cdot \eta_{mh}$）Overall efficiency

LA4VSO 轴向柱塞变量泵 Axial piston variable pump

控制方式 Operation Mode

1、概述 Outlined

压力控制DR/远程压力控制DRG
Pressure control DR/Remote pressure control DRG

调节液压系统中的最大压力
设定范围 20...350 bar
可选项：远程控制DRG

Maximum pressure adjustment in hydraulic system;
Set range 20...350 bar;
Option: remote control DRG

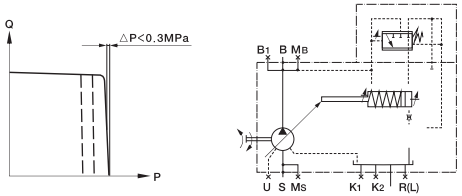

功率控制LR
Power control LR

双曲线功率控制在相同的输入转速下保持预设的驱动功率恒定。
可选项：压力控制LR2D，远程控制LR2G;
流量控制LR2F，LR2S;
液压行程限制器LR2H;
机械行程限制器LR2M;
液压两点控制LR2Z;
用于帮助启动的电气卸荷阀LR2Y。

The hyperbolic power control is kept constant at the same input speed.
Option:pressure control LR2D, remote control LR2G;
Flow controlLR2S,LR2F;
Hydraulic stroke limiter LR2H;
Mechanical stroke limiter LR2M;
Hlydraulic two point control LR2Z;
Electrical discharge valve for help starting LR2Y.

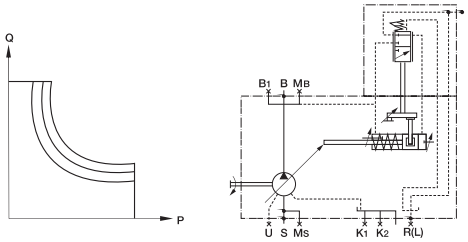

手动控制MA
Manual control MA

通过手轮进行流量的无级调节
Stepless adjustment of flow through the hand wheel

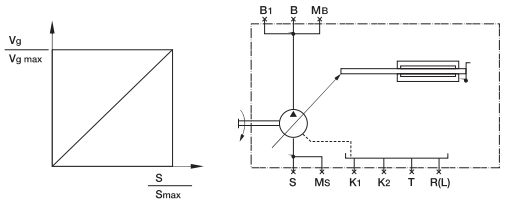

液压控制HD
Hydraulic control HD

泵流量（排量）的无级调节与先导压力有关。
调节与所施加的先导压力成比例。
可选项：先导压力特特性曲线 HD1，HD2,HD3;
压力控制HD.B，远程控制HD.GB;
功率控制DH1P;
电气先导压力控制HD1T

Pump flow (displacement) of the stepless regulation and the pilot pressure.
Adjust the proportion of the applied lead pressure.
Option: pilot pressure characteristic curve,HD1,HD3,HD2;
Pressure control HD.B, remote control HD.GB;
Power control DH1P;
Electrical lead pressure control HD1T

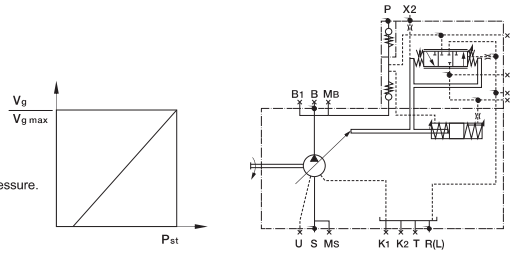

LA4VSO 轴向柱塞变量泵 Axial piston variable pump

液压流量控制 EO
Hydraulic displacement control EO

通过带有斜盘角度电子反馈的比例阀实现无级排量调整。
电子控制
可选项：短路阀EO1K, EO2K
无阀门EO1E, EO2E

Through the angle of the electronic feedback of the proportional valve to achieve stepless displacement adjustment.
Electronic control
Available options: EO1K,EO2K
No valve EO1E,EO2E

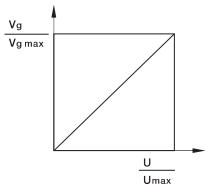

压力和流量控制 DFR
Pressure and flow control DFR

此控制能够在不断变化的工况（流量）下将来自泵的流量保持恒定。
机械可调式压力控制优先于控制。
可选项：堵住的油口X中的节流孔DFR1

This control can be kept constant in the constant flow rate of the pump under the condition of constant change.
Mechanical adjustable pressure control is preferred.
Available options: the throttle hole in the × of the oil port DFR1

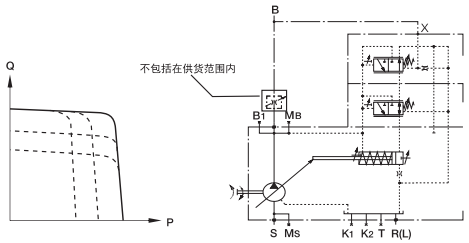

2、控制部分代号及其技术参数 The code of control section and technical parameter

(1)液压控制 Hydraulic control HD

概述
液压控制设定的流量与先导压力信号有关。
机械摆角限定能够设定在50%-100%Vg max范围内。
Outline
HD Hydraulic control of diaplacement dependent on pilot pressure signal. The displacement is proportional to the pilot pressure.
The mechanical pivot angle limit setting range is 50%--100%Vgmax.

订货代号如下表格 The ordering code number as following form

先导压力特性 Pilot pressure characteristic	40	71	125	180	250	355	500	
1-4.5Mpa	△	△	△	△	△	△	△	1
1-2.8Mpa	△	△	△	△	△	△	△	2
0.55-1.9Mpa	△	△	△	△	△	△	△	3
闭环压力控制 Closed loop pressure cotrol								
在A口带闭环压力控制 Control at A port	△	△	△	△	△	△	△	A
在B口带闭环压力控制 Control at B port	△	△	△	△	△	△	△	B
不带压力控制，不需填写代号 Without pressure control/need not fill the code								

HD

注：√ 有货；△准备中
Note: √Available; △in preparation

LA4VSO 轴向柱塞变量泵 Axial piston variable pump

外形图展示 Outline drawing

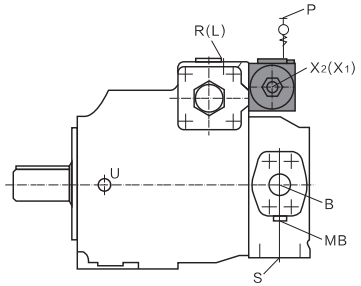

技术数据 Technical parameter

规格 Size		40	71	125	180	250	355	500
控制转移 Control moving distance	mm	14.2	17.3	20.7	20.7	25.9	25.9	32.6
控制面积 Control area	cm^2	3.9	6.4	9	9	14.4	14.4	18.8
控制体积 Control volume	cm^3	5.5	11	18.7	18.7	37.3	37.3	61.4
最低控制压力 Min.control pressure	MPa	3	3	5	5	5	5	5
控制时间 20Mpa压力s Control time 20Mpa pressure	s	0.1	0.1	0.1	0.1	0.2	0.2	0.8

(2)液压流量控制EO Hydraulic displacement control HD

概述
在EO电气控制工作中，泵流量由电气控制的比例方向阀来设定。同时泵的流量通过电感式位置传感器反馈信号。
该泵在不加压的情况下可通过弹簧实现控制缸的零位对中，当在高压工作时没有确定的复位。同时为了减少控制缸的流量损失，所有规格液压泵缸腔是密封的。

Outline
In the EO electric control work, the pump flow could set by proportion direction valve. Meanwhile, pump's current flow through inductance type position transducer feedback signal.
This pump could reset the cylinder's zero position by the spring controls in the situation of normal pressure.
Do not reset at high-pressured work. Simultaneously, in order to reduce controls cylinder's loss of flow, all size of hydraulic pressure fluid cylinder cavity is sealed.

订货代号如下表格 The ordering code number as following form

						40	71	125	180	250	355	500	
液压控制带比例阀 Hydraulic control with proportion valve	EO	1				△	△	△	△	△	△	△	EO1
	EO	1		E		△	△	△	△	△	△	△	EO1E
	EO	1			K	△	△	△	△	△	△	△	EO1K
	EO		2			△	△	△	△	△	△	△	EO2
	EO		2	E		△	△	△	△	△	△	△	EO2E
	EO		2		K	△	△	△	△	△	△	△	EO2K

最高压力设定值10MPa
Max.setting pressure 10MPa

最高压力设定值35MPa
Max.setting pressure 35MPa

带短路阀
Bypass valve

不带阀
Without valve

LA4VSO 轴向柱塞变量泵 Axial piston variable pump

外形图展示 Outline drawing

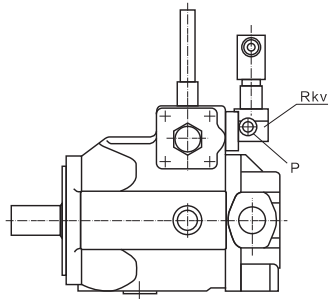

油口尺寸 Specifications of oil ports:

P 控制压力油口 Pressure port	M22×1.5 深16
控制油回油口 RKV Case drain port	M22×1.5 深16

技术数据 Technical parameter

规格 Size		40	71	125	180	250	355	500
控制缸位移 Control cylinder's moving distance	mm	14.2	17.3	20.7	20.7	25.9	25.9	32.8
控制缸面积 Control cylinder area	cm^2	8.1	12.6	18.1	16.1	28.3	28.3	38.2
控制体积 Control volume	cm^3	11.4	21.5	37.5	37.5	73.2	73.2	124.5
最低控制压力 Min.control pressure	Mpa	10	10	10	12.5	12.5	12.5	15
最高控制压力 Max.control pressure	Mpa	31.5	31.5	31.5	31.5	31.5	31.5	31.5
控制时间 Control time	s	0.1	0.12	0.2	0.2	0.25	0.25	0.3

(3)功率控制LR Power control LR

概述
控制泵在恒定驱动转速下不超过特定的驱动工率，使得PXVg=常数控制范围的开始也能够用机械方式设定，设定值的范围能够用弹簧和调整螺钉来调整。当压力减低时可通过调整弹簧进入它的起动位置，设定值的调整范围：3.5MPa-35MPa 最小和最大回转角的限制能够机械方式调整至Vg_{max}的50%。

Outline
At the very beginning, the control scope could use the mechanical way to set, the setting value scope could use the spring and screw to adjust. When the pressure decreases, we could adjust spring and enter its starting position, the setting range of preset value:3.5MPa--35MPa. The smallest and the biggest angle of rotation's limit can use the mechnical way, adjustment to Vg_{max} 50%.

特性曲线 Characteristic cuve

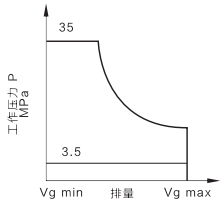

LA4VSO 轴向柱塞变量泵 Axial piston variable pump

外形图展示 Outline drawing

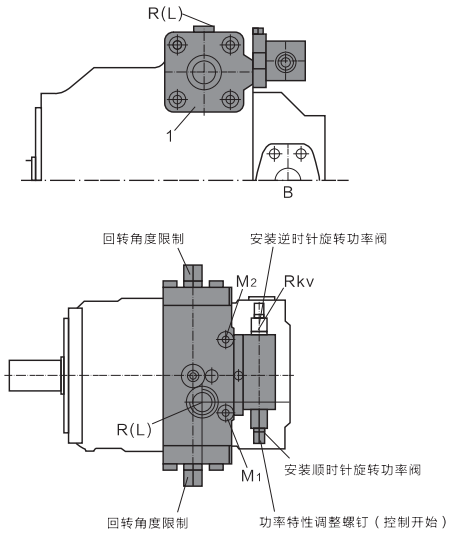

订货代号如下表格 The ordering code number as following form

应用于开式回路
带双曲线特性的功率调节器，基本设定值 $V_{g_{max}}$

Used for hydraulic drives in open loop circuits
With the hyperbolic curve characteristic power adjuster, basic setting value $V_{g_{max}}$

功率调节方式 Power regulation	40	71	125	180	250	355	500	
机械调整 The machinery adjust	√	√	√	√	√	△	△	2
液压远程控制 Remote hydraulic control	△	△	△	△	△	△	△	3
压力控制 Pressure control								
带压力控制 With pressure control	√	√	√	√	√	△	△	D
带压力控制，液压远程控制 With pressure control, remote hydraulic control	√	√	√	√	√	△	△	G
不带压力控制，不需填写代号 Without pressure control/need not fill the code								
流量控制，限制 Flow contro, limit								
带机械行程限制 With mechanical traveling schedule limit	△	△	△	△	△	△	△	M
不带流量控制，限制，不需填写代号 Without flow control, limit, need not fill the code								

LR □ □ □

注：√ 有货；△准备中
Note: √Available; △in preparation

LA4VSO 轴向柱塞变量泵 Axial piston variable pump

应用于开式，半闭式和闭式回路
带双曲线特性的功率调节器，基本设定值 $V_{g_{min}}$，依赖控制压力。

Used for hydraulic drives in open, semi-close & close loop circutis
With the hyper bolic curve character istic power adjuster, basic setting value Vgmax. depend on control pressure.

功率调节方式 Power regulation	40	71	125	180	250	355	500	
机械调整 The machinery adjust	△	△	△	△	△	△	△	2
液压远程控制 Remote hydraulic control	△	△	△	△	△	△	△	3
压力控制 Pressure control								
带压力控制 With pressure control	△	△	△	△	△	△	△	D
带压力控制，液压远程控制 With pressure control, remote hydraulic control	△	△	△	△	△	△	△	G
不带流量控制，限制，不需填写代号 Without flow control, limit, need not fill the code								

LR □ □ N □

LA4VSO 轴向柱塞变量泵 Axial piston variable pump

安装位置 Installation Position

卧置 Horizontal installation

液压泵安装在油箱内
当油箱的最低液面高于泵的上端部分，泄油口和S口可敞开，如右图所示

The hydraulic pump installed within a tank
If the minimum fluid level is level above the top of pump, case drain ports and port S are open, as right diagram.

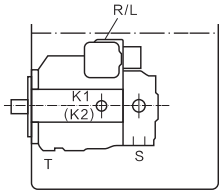

当油箱的最低液面低于泵的上端部分，泄油口和S口需用管道连接，如下图所示
If the minimum fluid level falls the top of pump, case drain ports and port S must be piped, as following diagram

液压泵安装在油箱外面
若泵安装在油箱下面，则泄漏油管和S口用管道连接，如右图所示。

The hydraulic pump installed outside a tank
If the pump installed below the tank, drain pipe and port S must be piped, as right diagram

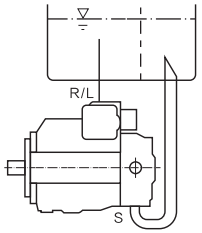

若泵安装在油箱上面，则泄漏油管和S口用管道连接，参照本页最上图。
If the pump installed above the tank, drain pipe and port S must be piped, refer.

垂直安装 Vertical installation

液压泵安装在油箱内
当油箱的最低液面高于泵的前端法兰时，泄油口T和S口可敞开，R/L口可敞开，如右图所示

The hydraulic pump installed within a tank
If the minimum fluid level is level with of above the pump, mounting flange case drain ports T,S and port R/L are open, as right diagram.

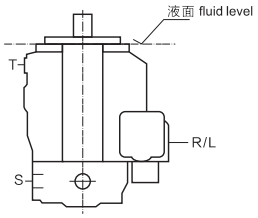

当油箱的最低液面低于泵的前端法兰时，泄油口T，S口以及R/L口须用管道连接，如右图所示
If the minimum fluid level fall below the pump mounting flange, case drain ports T,S and port P/L must be piped, as right diagram.

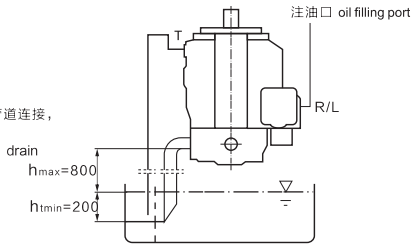

LA4VSO 轴向柱塞变量泵 Axial piston variable pump

液压泵规格尺寸 Dimensions & Size

LA4VSO-40泵外形连接尺寸（图示：DR变量机构）
Dimensions, Size LA4VSO-40 (Diagram: DR Variable)

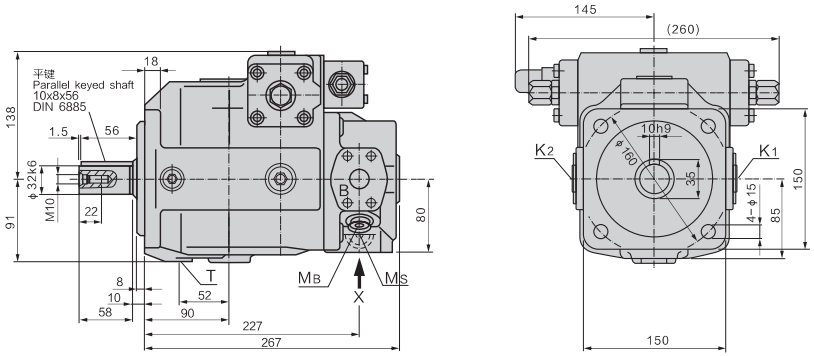

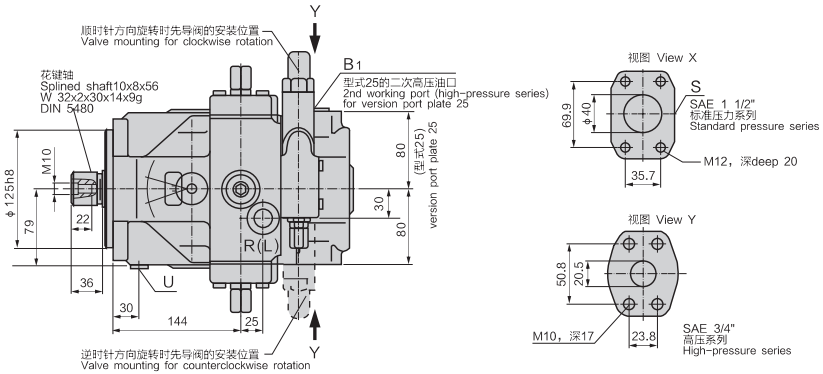

B	压力油口 Pressure port	φ20.5
B1	辅助压力油口 Auxiliary pressure port 当工作油口为25型时，B1口为Y向视 When the working port is type 25, B1 port correspondingviewed on Y direction.	M22×1.5 深 deep16
S	吸油口 Suction port	φ40
T	泄油口 Case drain port	M22×1.5 深 deep16
R(L)	R(L)注油口+通气口 Fluid fill and air bleed port	M22×1.5
MB, MS	测压点 Test port	M14×1.5 深 deep12
K1,K2	洗油口 Flushing port	M22×1.5 深 deep14
U	轴承冲洗油口 Bearing flushing port	M14×1.5 深 deep12 堵 plugged

LA4VSO 轴向柱塞变量泵 Axial piston variable pump

液压泵规格尺寸 Dimensions & Size

LA4VSO-71泵外形连接尺寸（图示：DR变量机构）
Dimensions, Size LA4VSO-71（Diagram: DR Variable）

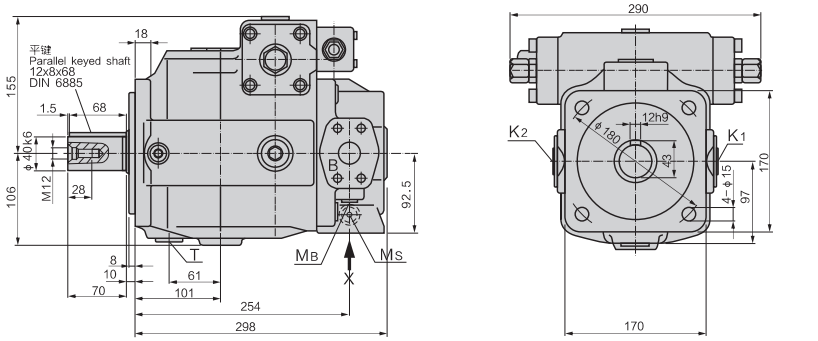

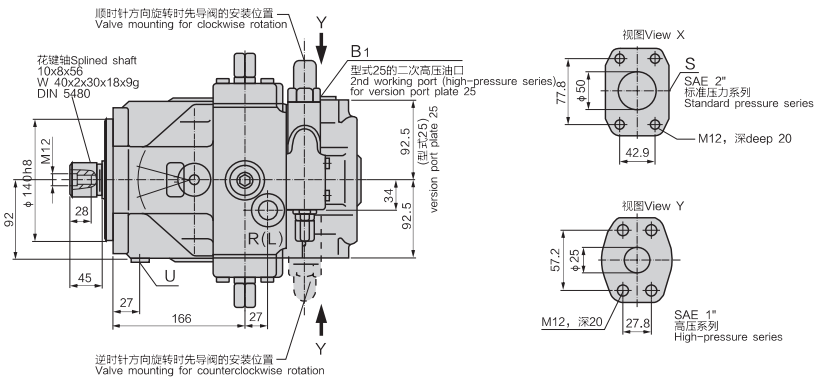

B	压力油口 Pressure port	ϕ25
B1	辅助压力油口 Auxiliary pressure port 当工作油口为25型时，B1口为Y向视 When the working port is type 25, B1 port correspondingviewed on Y direction.	M27×2 深 deep 16
S	吸油口 Suction port	ϕ50
T	泄油口 Case drain port	M27×2 深 deep16
R(L)	R(L)注油口+通气口 Fluid fill and air bleed port	M27×2
K_1,K_2	洗油口 Flushing port	M27×2 深 deep16

LA4VSO 轴向柱塞变量泵 Axial piston variable pump

液压泵规格尺寸 Dimensions & Size

LA4VSO-125泵外形连接尺寸（图示：DR变量机构）
Dimensions, Size LA4VSO-125（Diagram: DR Variable）

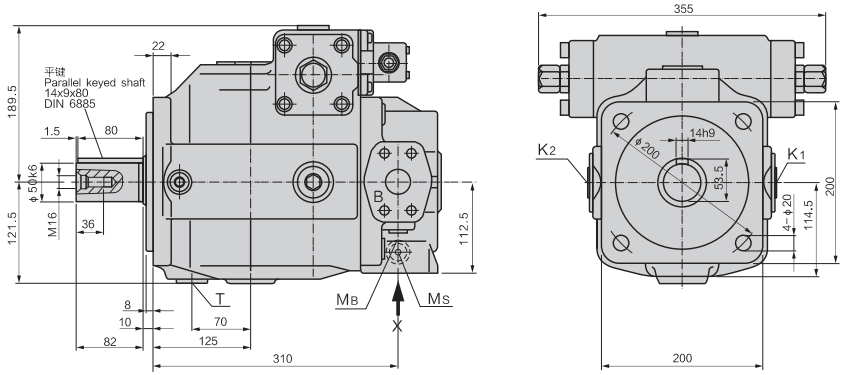

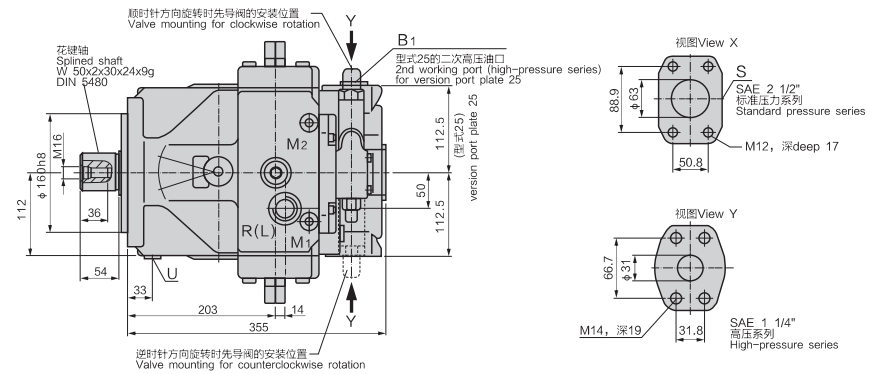

B	压力油口 Pressure port	ϕ31
B1	辅助压力油口 Auxiliary pressure port 当工作油口为25型时，B1口为Y向视 When the working port is type 25, B1 port correspondingviewed on Y direction.	M33×2 深 deep 18
S	吸油口 Suction port	ϕ63
T	泄油口 Case drain port	M33×2 深 deep18
R(L)	R(L)注油口+通气口 Fluid fill and air bleed port	M33×2
M_B, M_S	测压点 Test port	M14×1.5 深 deep12
K_1,K_2	洗油口 Flushing port	M33×2 深 deep18
U	轴承冲洗油口 Bearing flushing port	M14×1.5 深 deep12 堵 plugged

LA4VSO 轴向柱塞变量泵 Axial piston variable pump

液压泵规格尺寸 Dimensions & Size

LA4VSO-180泵外形连接尺寸（图示：DR变量机构）
Dimensions, Size LA4VSO-180（Diagram: DR Variable）

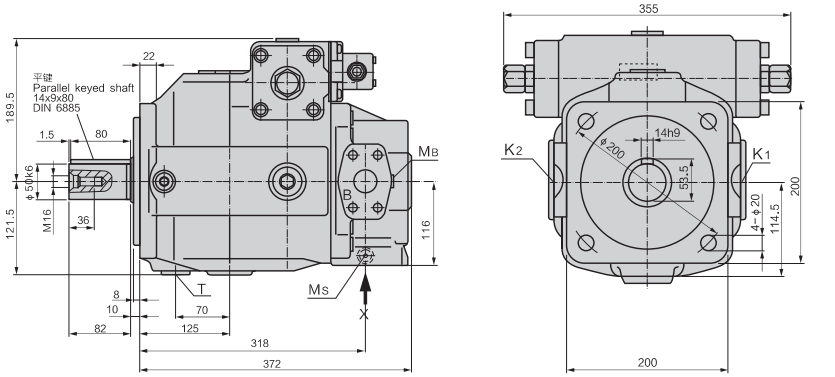

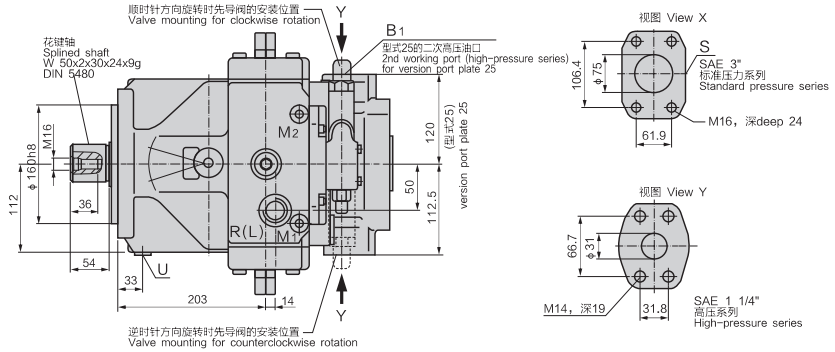

B	压力油口 Pressure port	φ31
B1	辅助压力油口 Auxiliary pressure port 当工作油口为25型时，B1口为Y向视 When the working port is type 25, B1 port correspondingviewed on Y direction.	M33×2 深 deep 18
S	吸油口 Suction port	φ75
T	泄油口 Case drain port	M33×2 深 deep18
R(L)	R(L)注油口+通气口 Fluid fill and air bleed port	M33×2
MB, MS	测压点 Test port	M14×1.5 深 deep12
K1,K2	洗油口 Flushing port	M33×2 深 deep18
U	轴承冲洗油口 Bearing flushing port	M14×1.5 深 deep12 堵 plugged

LA4VSO 轴向柱塞变量泵 Axial piston variable pump

液压泵规格尺寸 Dimensions & Size

LA4VSO-250泵外形连接尺寸（图示：DR变量机构）
Dimensions, Size LA4VSO-250（Diagram: DR Variable）

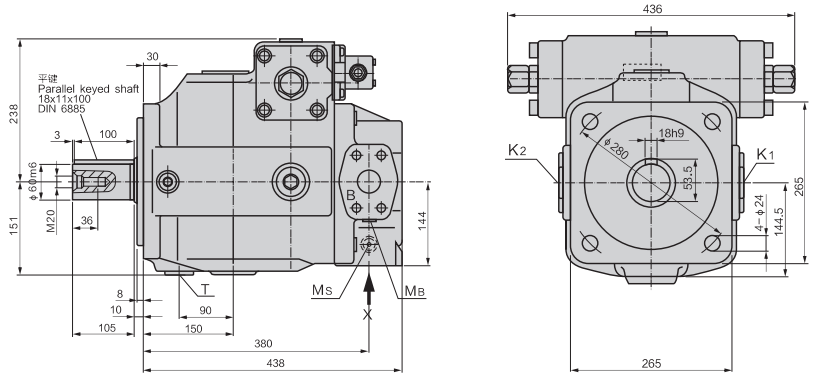

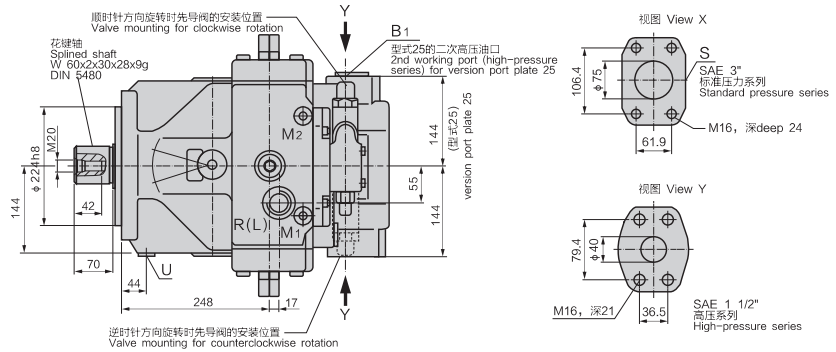

B	压力油口 Pressure port	φ40
B1	辅助压力油口 Auxiliary pressure port 当工作油口为25型时，B1口为Y向视 When the working port is type 25, B1 port correspondingviewed on Y direction.	M33×2 深 deep 18
S	吸油口 Suction port	φ75
T	泄油口 Case drain port	M42×2 深 deep18
R(L)	R(L)注油口+通气口 Fluid fill and air bleed port	M42×2
MB, MS	测压点 Test port	M14×1.5 深 deep12
K1,K2	洗油口 Flushing port	M42×2 深 deep18
U	轴承冲洗油口 Bearing flushing port	M14×1.5 深 deep12 堵 plugged

LA4VSO 轴向柱塞变量泵 Axial piston variable pump

液压泵规格尺寸 Dimensions & Size

LA4VSO-355泵外形连接尺寸（图示：DR变量机构）
Dimensions, Size LA4VSO-355（Diagram: DR Variable）

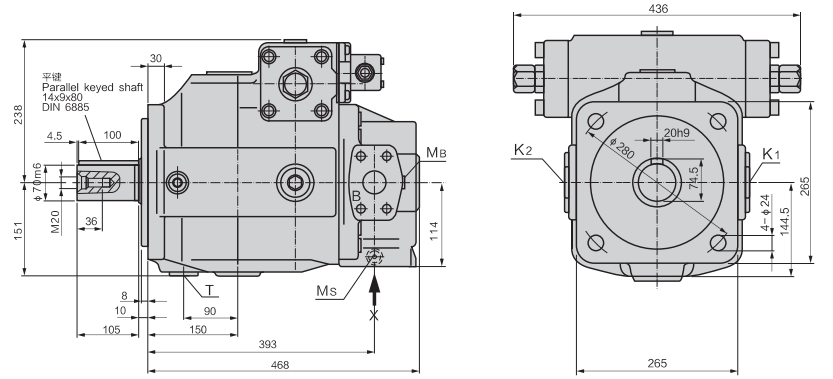

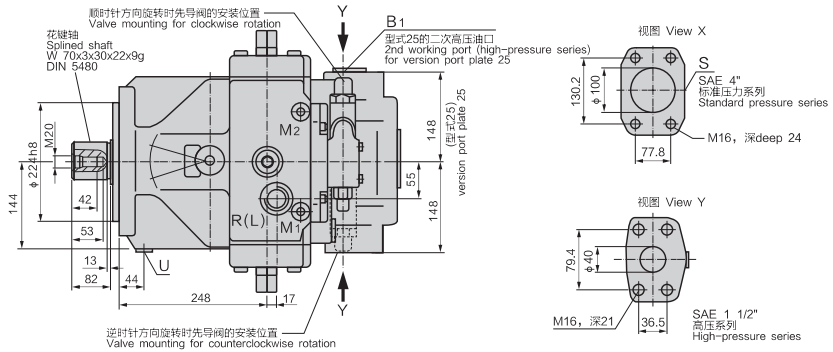

S	吸油口 Suction port	ϕ100	
B	SAE 1 1/2" M42x2		
B1	4" M42x2 M14x1.5 M24x2	M18x1.5 M18x1.5	

LA4VSO 轴向柱塞变量泵 Axial piston variable pump

液压泵规格尺寸 Dimensions & Size

LA4VSO-500泵外形连接尺寸（图示：DR变量机构）
Dimensions, Size LA4VSO-500（Diagram: DR Variable）

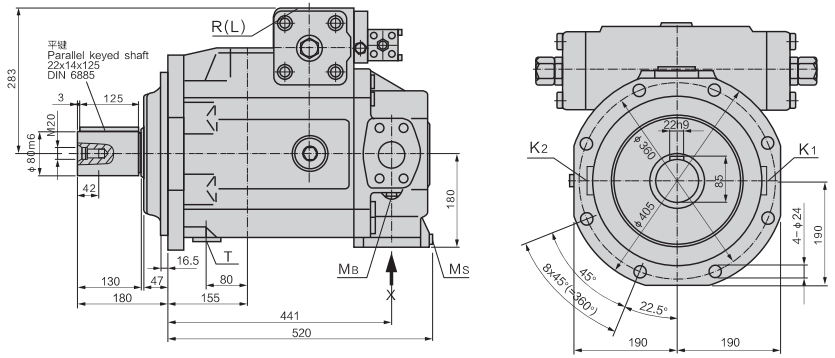

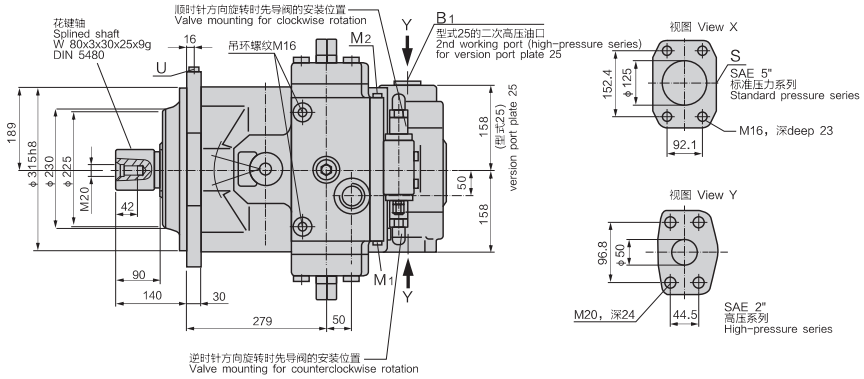

B	压力油口 Pressure port	SAE2n"
B1	辅助压力油口 Auxiliary pressure port 当工作油口为25型时，B1口为Y向视 When the working port is type 25, B1 port correspondingviewed on Y direction.	M48×2 深 deep 22
S	吸油口 Suction port	SAE5n"
T	泄油口 Case drain port	M48×2 深 deep 22
R(L)	R(L)注油口+通气口 Fluid fill and air bleed port	M48×2
MB, MS	测压点 Test port	M18×2 深 deep12
K1,K2	洗油口 Flushing port	M48×2 深 deep12
U	轴承冲洗油口 Bearing flushing port	M18×1.5 深 deep12

串 泵
Tandem (Double,Triple) Pump

适用于开式回路液压系统
Used for hydraulic drives in open loop ciruits

产品特点	Features
斜盘轴向柱塞泵;	Swash axial piston pump
优异的吸入特性;	Good suction characteristic.
选用长寿命，高精度轴承;	Long service life, high-precision bearings.
节省发动机的数量;	Retrench the quantity of engine.
结构设计紧凑，节省空间;	Have the structural design of compact, save space.
可实现更加灵活的油路控制。	More flexible oil channel control.

串 泵 Tandem (Double,Triple) Pump

订货型号 Ordering Code

L	-		A4VS	O			/			-				
液压 Hydraulic		液压油 Hydraulic fluid	轴向柱塞元件 Axial piston unit	工作模式 Type of operation	规格 Size	控制方式 Mode of operation		系列号 Series	旋转方向 Direction of rotation		密封件 Seals	轴伸 Shaft end	安装法兰 Mounting flange	工作油口 Service ports	通轴驱动 Through drive

LA4V串泵型号说明 Model Description

液压 Hydraulic	L

液压油 Hydraulic fluid

矿物油 Mineral oils	无标识
HF流体 HF;HFB and HFC-Mediums	E

轴向柱塞元件 Axial piston unit

变量泵，斜盘结构，工业用途 Variable displacement pump, industrial uses	A4VS

工作模式 Type of operation

泵，开式回路 Pump,open circuits	O

规格 Size

△排量 Displacement Vg max(ml/r)	40	71	125	180	250	355	500	

控制方式 Mode of operation 注：√ 有货；△准备中；– 无货
Note: √Available; △in preparation; – not available

压力控制 Pressure control DR	√	√	√	√	√	△	√	DR...
按双曲线变化的功率控制 LR Power control with hyperbolic open, curve	√	√	√	√	√	△	√	LR...
手动控制 Manual control MA	√	√	√	√	√	△	√	MA...
电控 Electronic control EO	√	√	√	√	√	△	√	EO...
和压力有关的液压控制 HD Hydraulic control, pilot pressure dependent	√	√	√	√	√	△	√	HD...

系列号 Series	40	71	125	180	250	355	500	
	√	√	—	—	—	△	—	10
	—	—	√	√	√	△	√	22
	—	√	√	√	√	△	√	30

旋转方向 Direction of rotation

从轴端看 With view on shaft end	顺时针 Clockwise	R
	逆时针 Counterclockwise	L

密封件 Seals

丁腈橡胶 NBR Nitrile rubber	P
氟橡胶 FKM Fluoro-rubber	V

串 泵 Tandem (Double,Triple) Pump

轴伸 Shaft end

平键运动 Keyed parallel shaft	P
花键运动 Splined shaft	Z

安装法兰 Mounting flange

	40	71	125	180	250	355	500	
ISO 4孔 hole	√	√	√	√	√	△	–	B

工作油口 Service ports

B口，S口 错开90°；辅助油口B1为螺纹连接 Port B and port S 90° offset; auxiliary pressure port B1 Metric fixing screws	√	√	√	√	√	△	√	13
B口，S口 错开90°；辅助油口B1为法兰连接 Port B and port S 90° offset; pressure connection B1 connected by flange	√	√	√	√	√	△	√	25

通轴驱动 Through drive

带通轴驱动，可连接轴向柱塞元件、齿轮泵或径向柱塞泵 Through drive, can be connected with axial piston unit, gear pump or radial piston pump. 法兰 Flange	轴套/轴 Hub/shaft	可连接 Connect with	40	71	125	180	250	355	500	
ISO 125, 4-孔 Hole	花键轴 Splined shaft 32x2x30x14x9g	LA4VSO/H/G 40	√	√	√	√	√	√	√	K31
ISO 140, 4-孔 Hole	花键轴 Splined shaft 40x2x30x18x9g	LA4VSO/H/G 71	–	√	√	√	√	√	√	K33
ISO 160, 4-孔 Hole	花键轴 Splined shaft 50x2x30x24x9g	LA4VSO/H/G 125	–	–	√	√	√	√	√	K34
ISO 160, 4-孔 Hole	花键轴 Splined shaft 50x2x30x24x9g	LA4VSO/G 180	–	–	–	√	√	√	√	K34
ISO 224, 4-孔 Hole	花键轴 Splined shaft 60x2x30x28x9g	LA4VSO/H/G 250	–	–	–	–	√	√	√	K35
ISO 224, 4-孔 Hole	花键轴 Splined shaft 70x3x30x22x9g	LA4VSO/G 355	–	–	–	–	–	√	√	K77
ISO 315, 8-孔 Hole	花键轴 Splined shaft 80x3x30x25x9g	LA4VSO/G 500	–	–	–	–	–	–	√	K43
ISO 80, 2-孔 Hole	花键轴 Splined shaft 3/4" 19-4(SAE A-B)	LA10VSO 18	△	△	△	△	△	△	△	KB2
ISO 100, 2-孔 Hole	花键轴 Splined shaft 7/8" 22-4(SAE B)	LA10VSO 28	√	√	√	√	√	√	√	KB3
ISO 100, 2-孔 Hole	花键轴 Splined shaft 1" 25-4(SAE B-B)	LA10VSO 45	√	√	√	√	√	√	√	KB4
ISO 125, 2-孔 Hole	花键轴 Splined shaft 1 1/4" 32-4(SAE C)	LA10VSO 71	–	√	√	√	√	√	√	KB5
ISO 125, 2-孔 Hole	花键轴 Splined shaft 1 1/2" 38-4(SAE C-C)	LA10VSO 100	–	–	△	√	√	√	√	KB6
ISO 180, 4-孔 Hole	花键轴 Splined shaft 1 3/4" 44-4(SAE D)	LA10VSO 140	–	–	△	△	△	△	△	KB7
82-2(SAE A,2-孔 Hole)	花键轴 Splined shaft 5/8" 16-4(SAE A)	G2/GC2/GC3-1X	√	√	√	√	√	√	√	K01
82-2(SAE A,2-孔 Hole)	花键轴 Splined shaft 3/4" 19-4(SAE A-B)	LA10VSO 18	△	△	△	△	△	△	△	K52
101-2(SAE B,2-孔 Hole)	花键轴 Splined shaft 7/8" (SAE B)	G3	√	√	√	√	√	√	√	K02
101-2(SAE B)	花键轴 Splined shaft 25-4(SAE B-B)	GC4-1X, LA10VO 45	△	△	√	√	√	△	△	K04
127-2(SAE C)	花键轴 Splined shaft 32-4(SAE C)	LA10VO 71	–	△	△	△	△	△	△	K07
101-2(SAE B)	花键轴 Splined shaft 32-4(SAE C)	GC5-1X	△	√	√	√	√	△	△	K06
127-2(SAE C)	花键轴 Splined shaft 38-4(SAE C-C)	GC6-1X, LA10VO 10	–	–	△	△	△	△	△	K24
152-4(SAE D)	花键轴 Splined shaft 44-4(SAE D)	LA10VO 140	–	–	–	△	△	△	△	K17
ϕ63, metric 4-孔	带键轴 ϕ25	R4	√	√	√	△		△	△	K57
101-2(SAE B)	花键轴 Splined shaft 22-4(SAE B)	G4, LA10VO 28	√	√	√	√	√	△	√	K68
带通轴驱动轴，无轴套，无变径法兰，带盖板。 Prepared for through drive, with pressure-resistant plugged cover.			√	√	√	√	√	√	√	K99

串 泵 Tandem (Double,Triple) Pump

如需另外安装泵，可为用户提供独立的回路。
1、如组合泵由2台Brueninghaus 泵组成，并且需要在工厂安装，应引用两台泵的型号，用“+”连接。
订货示例：LA4VSO 125 DR/22R-PPB13K33+LA4VSO 71 DR/10R-PZB13N00
2、如需在工厂安装齿轮泵或径向柱塞泵作为第2泵，请向我公司咨询。

By using combination pumps, it is possible to have independent circuits without the need for splitter gearboxes.
1.When ordering combination pumps, the type designations of the 1st and 2nd pumps must be connected with a “+” and are combined in one part number. For example:LA4VSO125DR/22R-PPB13K33+LA4VSO71DR/10R-PZB13N00
2.If you need to install a gear pump or radial piston pump as the second pump at the factory, please consult your sales representative.

LA4V主要参数 Parameter

允许通轴驱动扭矩 Maximum allowable thru-drive torque

花键轴 Splined shaft

公称规格 Displacement			40	71	125	180	250	355	500	750	1000
前泵的最大允许通轴驱动扭矩 Primary pump maximum allowable thru-drive torque											
(前泵+后泵) Primary pump+2nd pump	Ttotal max.	Nm	446	790	1392	2004	2782	3952	5566	8348	11130
1 允许通轴驱动扭矩 Maximum allowable thru-drive torque	TD1max.	Nm	223	395	696	1002	1391	1976	2783	4174	5565
	TD2max.	Nm	223	395	696	1002	1391	1976	2783	4174	5565
2 允许通轴驱动扭矩 Maximum allowable thru-drive torque	TD1max.	Nm	223	395	696	1002	1391	1976	2783	4174	5565
	TD2max.	Nm	223	395	696	1002	1391	1976	2783	4174	5565

平键轴 Parallel keyed shaft

公称规格 Displacement			40	71	125	180	250	355	500	750	1000
前泵的最大允许通轴驱动扭矩 Primary pump maximum allowable thru-drive torque											
(前泵+后泵) Primary pump+2nd pump	Ttotal max.	Nm	380	700	1392	1400	2300	3557	5200	7513	9444
1 允许通轴驱动扭矩 Maximum allowable thru-drive torque	TD1max.	Nm	223	395	696	1002	1391	1976	2783	4174	5565
	TD2max.	Nm	157	305	696	398	909	1581	2417	3339	3879
2 允许通轴驱动扭矩 Maximum allowable thru-drive torque	TD1max.	Nm	157	305	696	398	909	1581	2417	3339	3879
	TD2max.	Nm	223	395	696	1002	1391	1976	2783	4174	5565

与主泵安装法兰有关的允许惯性矩
Permissible mass torque based on mounting flange on primary pump

公称规格 Displacement			40	71	125	180	250	355	500
允许惯性矩 Permissible moment of inertia	Tm zul.	Nm	1800	2000	4200	4200	9300	9300	15600
动态质量加速度为10g（≈98.1m/sec²）时的允许惯性矩 Permissible moment of inertia for dynamic mass acceleration 10 g (= 98.1 m/s2)	Tm zul.	Nm	180	200	420	420	930	930	1560
重量 Weight（DR）	m	kg	39	53	88	102	184	207	320
中心到中心的距离 Distance from center of gravity	l1	mm	120	140	170	180	210	220	230

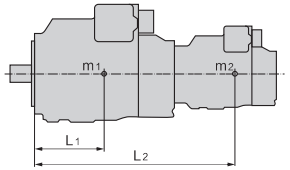

m_1, m_2 [kg] 泵重量
l_1, l_2 [mm] 中心到中心的距离 Distance from center of gravity

$$T_m = m_1 \cdot l_1 \cdot \frac{1}{102} + m_2 \cdot l_2 \cdot \frac{1}{102} [Nm]$$

串 泵 Tandem (Double,Triple) Pump

LA4V串泵外形连接尺寸 Mounting Dimension

LA4VSO+LA4VSO

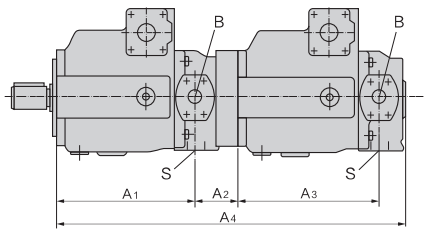

LA4VSO+LA10VSO

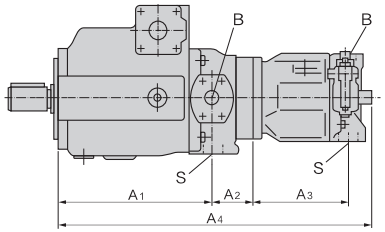

LA4VSO+LA4VSO 数据 data

主泵 primary pump / 第2泵 2nd pump	LA4VSO 40				LA4VSO 71				LA4VSO 125				LA4VSO 180				LA4VSO 250			
	A1	A2	A3	A4	A1	A2	A3	A4	A1	A2	A3	A4	A1	A2	A3	A4	A1	A2	A3	A4
LA4VSO 40	227	61	227	557	254	62	27	585	310	37	227	616	318	53	227	640	380	51	227	700
LA4VSO 71	–	–	–	–	254	62	54	614	310	63	254	671	318	79	254	695	380	51	254	729
LA4VSO 125	–	–	–	–	–	–	–	–	310	69	310	734	318	85	310	758	380	89	310	824
LA4VSO 180	–	–	–	–	–	–	–	–	–	–	–	–	318	85	318	782	380	89	318	848
LA4VSO 250	–	–	–	–	–	–	–	–	–	–	–	–	–	–	–	–	380	89	380	908

主泵 primary pump / 第2泵 2nd pump	LA4VSO 355				LA4VSO 500			
	A1	A2	A3	A4	A1	A2	A3	A4
LA4VSO 40	393	67	227	729	441	64	227	774
LA4VSO 71	393	67	254	758	441	64	254	803
LA4VSO 125	393	105	310	853	441	64	310	860
LA4VSO 180	393	105	318	877	441	64	318	884
LA4VSO 250	393	105	380	937	441	100	380	980
LA4VSO 355	393	105	393	966	441	100	393	1009
LA4VSO 500	–	–	–	–	441	149	441	1110

LA4VSO+LA10VSO2 数据 data

主泵 primary pump / 第2泵 2nd pump	LA4VSO 40				LA4VSO 71				LA4VSO 125				LA4VSO 180				LA4VSO 250			
	A1	A2	A3	A4	A1	A2	A3	A4	A1	A2	A3	A4	A1	A2	A3	A4	A1	A2	A3	A4
LA10VSO 18	227	36	145	458	254	37	145	486	310	37	145	542	318	53	145	566	380	51	145	626
LA10VSO 28	227	63	164	496	254	37	164	497	310	37	164	553	318	53	164	577	380	51	164	637
LA10VSO 45	227	63	184	514	254	57	184	535	310	57	184	591	318	73	184	615	380	51	184	655
LA10VSO 71	–	–	–	–	254	67	217	578	310	68	217	635	318	84	217	659	380	69	217	706
LA10VSO 100	–	–	–	–	–	–	–	–	310	74.5	275	710.5	318	90.5	275	734.5	380	77	275	783
LA10VSO 140	–	–	–	–	–	–	–	–	–	–	–	–	318	*	275	*	380	89	275	806

主泵 primary pump / 第2泵 2nd pump	LA4VSO 355				LA4VSO 500			
	A1	A2	A3	A4	A1	A2	A3	A4
LA10VSO 18	393	67	145	655	441	64	145	700
LA10VSO 28	393	67	164	666	441	64	164	711
LA10VSO 45	393	67	184	684	441	64	184	729
LA10VSO 71	393	85	217	735	441	64	217	762
LA10VSO 100	393	93	275	812	441	90	275	857
LA10VSO 140	393	105	275	835	441	89	275	867

串 泵 Tandem (Double,Triple) Pump

LA4V通轴驱动尺寸 Through Drive Dimension

ISO 125, 4孔；用于安装 LA4VSO/H/G 40(花键轴) 订货型号 **K33**
ISO 125,4 hole; for installation of LA4VSO/H/G 40(splined shaft),order code **K33**

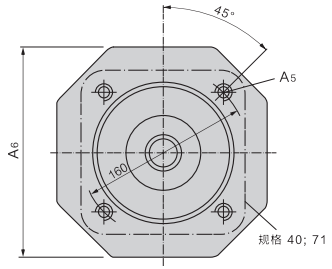

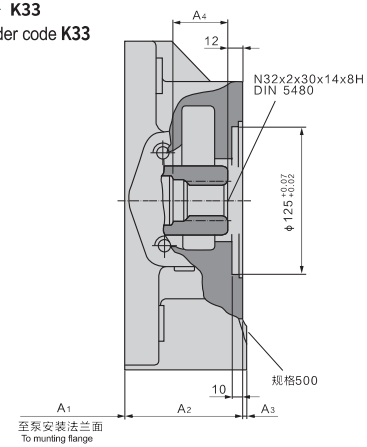

主泵规格 primary pump size	A1	A2	A3	A4	A5	A6
40	189	99	–	58	M12;深 deep 24	–
71	216	10	–	55	M12;深 deep 24	–
125	265	82	8	37	M12;深 deep 18	150
180	265	106	–	37	M12;深 deep 18	160
250	327	104	2	48	M12;深 deep 18	200
355	327	133	–	48	M12;深 deep 18	220
500	365	140	14	60	M12;深 deep 18	240

ISO 140, 4孔；用于安装 LA4VSO/H/G 71(花键轴) 订货型号 **K33**
ISO 140,4 hole; for installation of LA4VSO/H/G 71(splined shaft),order code **K33**

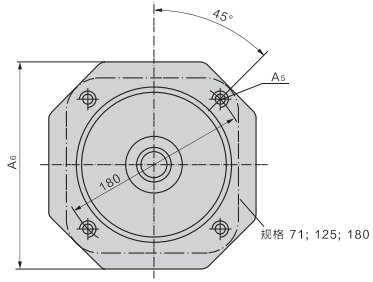

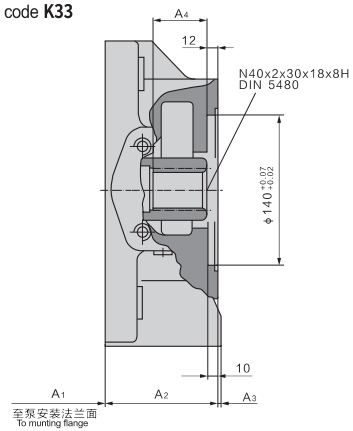

主泵规格 primary pump size	A1	A2	A3	A4	A5	A6
71	216	100	–	44	M12;深 deep 24	–
125	265	108	–	45	M12;深 deep 25	–
180	265	132	–	45	M12;深 deep 18	–
250	327	104	2	48	M12;深 deep 18	200
355	327	133	–	48	M12;深 deep 18	220
500	365	140	15	60	M12;深 deep 18	240

串 泵 Tandem (Double,Triple) Pump

LA4V通轴驱动尺寸 Through Drive Dimension

ISO 160, 4孔；用于安装 LA4VSO/H/G 125或180(花键轴) 订货型号 **K34**
ISO 160,4 hole; for installation of LA4VSO/H/G 125/180(splined shaft),order code **K34**

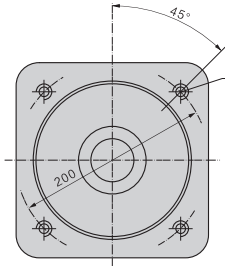

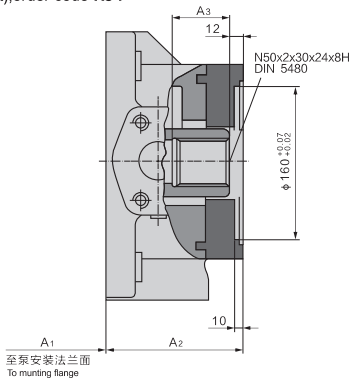

主泵规格 primary pump size	A1	A2	A3	A4
125	265	114	58	M16;深 deep 31
180	265	138	53	M16;深 deep 32
250	327	142	60	M16;深 deep 32
355	327	171	60	M16;深 deep 32
500	365	140	60	M16;深 deep 24

ISO 224, 4孔；用于安装 LA4VSO/H/G 250(花键轴) 订货型号 **K35**
ISO 224,4 hole; for installation of LA4VSO/H/G 250(splined shaft),order code **K35**

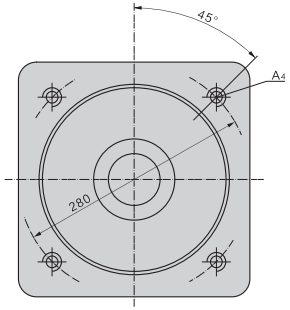

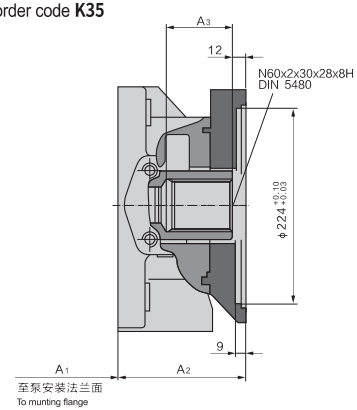

主泵规格 primary pump size	A1	A2	A3	A4
250	327	142	75	M20;深 deep 37
355	327	171	75	M20
500	365	176	74	M20;深 deep 36

串 泵 Tandem (Double,Triple) Pump

LA4V通轴驱动尺寸 Through Drive Dimension

ISO 224, 4孔；用于安装 LA4VSO/G 355(花键轴) 订货型号 **K77**
ISO 224,4 hole; for installation of LA4VSO/H/G 355(splined shaft), order code **K77**

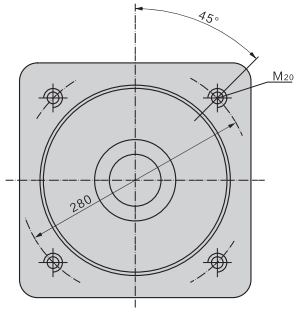

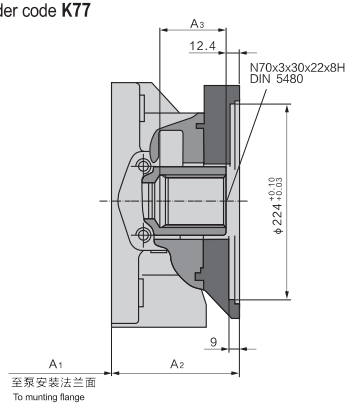

主泵规格 primary pump size	A1	A2	A3
355	327	171	82
500	365	176	76

ISO 315, 8孔；用于安装 LA4VSO/G 500(花键轴) 订货型号 **K43**
ISO 315,8 hole; for installation of LA4VSO/H/G 500(splined shaft), order code **K43**

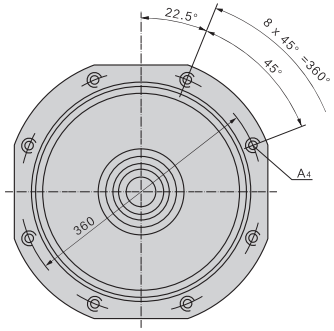

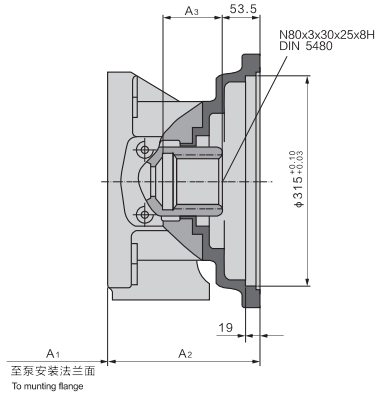

主泵规格 primary pump size	A1	A2	A3	A4
500	365	225	91	M20;深 deep 26
750	397	243	91	M20;深 deep 26

串 泵 Tandem (Double,Triple) Pump

LA4V通轴驱动尺寸 Through Drive Dimension

ISO 400, 8孔；用于安装第二台 LA4VSO/G 750(花键轴) 订货型号 **K76**
ISO 400,8 hole; for installation of LA4VSO/G 750(splined shaft),order code **K76**

主泵公称规格 750
primary pump size 750

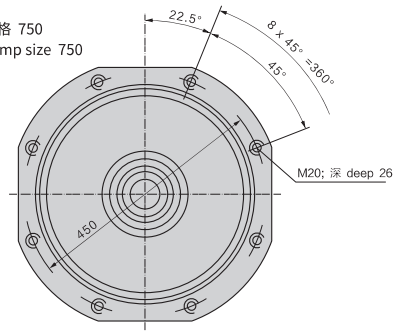

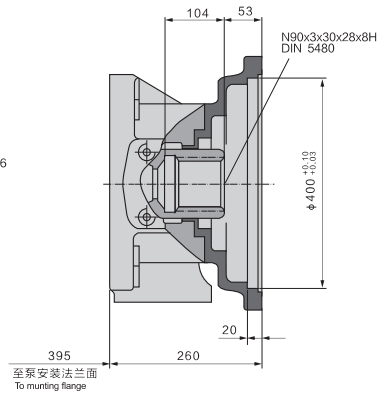

ISO 400, 8孔；用于安装第二台 LA4VSO/G 1000(花键轴) 订货型号 **K88**
ISO 400,8 hole; for installation of LA4VSO/G 1000(splined shaft),order code **K88**

主泵公称规格 1000
primary pump size 1000

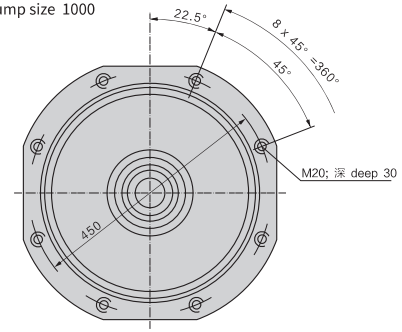

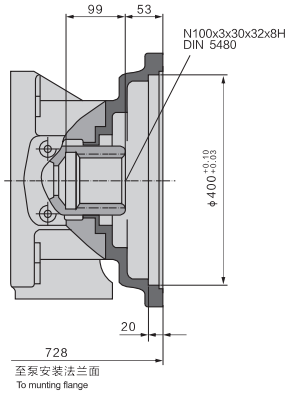

NVICKS® 威克斯液压 VICKS HYDRAULIC

串 泵 Tandem (Double,Triple) Pump

LA4V通轴驱动尺寸 Through Drive Dimension

ISO 80, 2孔；用于安装 LA10VSO 18(花键轴 S)–参见 RC 92712 订货型号 **KB2**
ISO 80,2 hole; for installation of LA4VSO 18(splined shaft S), Reference RC 92712 order code **KB2**

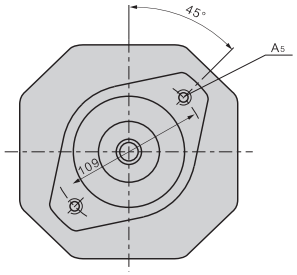

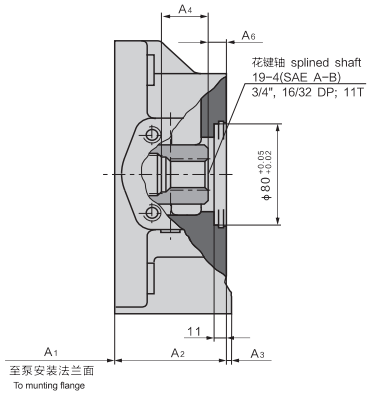

主泵规格 primary pump size	A1	A2	A3	A4	A5	A6
125	265	82	11.5	19.1	M10	21.4

ISO 100, 2孔；用于安装 LA10VSO 28(花键轴 S)–参见 RC 92711 订货型号 **KB3**
ISO 100,2 hole; for installation of LA4VSO 28(splined shaft S), Reference RC 92711 order code **KB3**

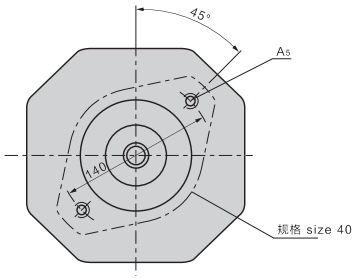

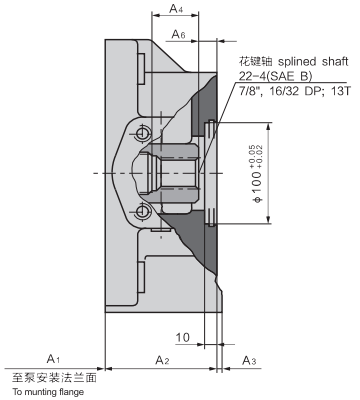

主泵规格 primary pump size	A1	A2	A3	A4	A5	A6
40	189	101	–	55	M12;深deep 26	20.3

串 泵 Tandem (Double,Triple) Pump

LA4V通轴驱动尺寸 Through Drive Dimension

ISO 100, 2孔；用于安装 LA10VSO 45 (花键轴 S)–参见RC 92711 订货型号 **KB4**
ISO 100,2 hole; for installation of LA4VSO 45(splined shaft S), Reference RC 92711 order code **KB4**

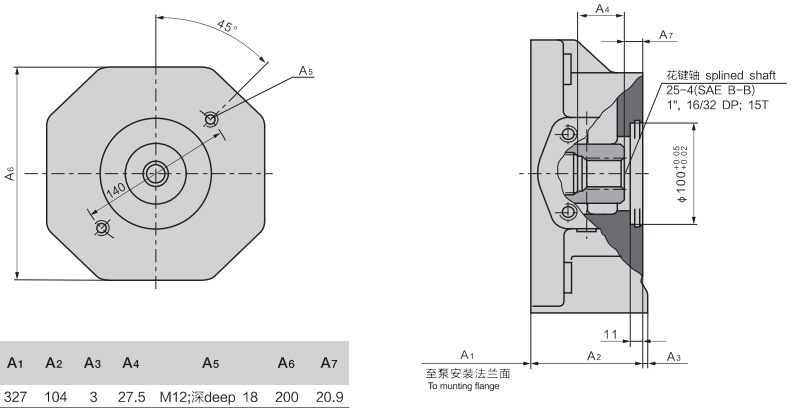

主泵规格 primary pump size	A1	A2	A3	A4	A5	A6	A7
250	327	104	3	27.5	M12;深deep 18	200	20.9

ISO 125, 2孔；用于安装 LA10VSO 71(花键轴 S)–参见 RC 92711 订货型号 **KB5**
ISO 125,2 hole; for installation of LA4VSO 71(splined shaft S), Reference RC 92711 order code **KB5**

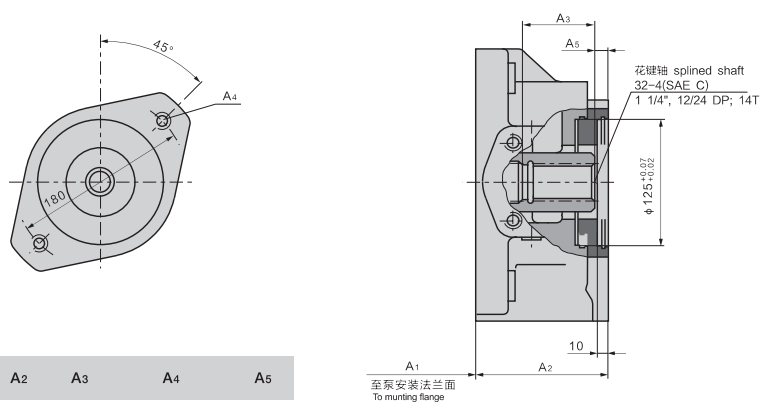

主泵规格 primary pump size	A1	A2	A3	A4	A5
125	265	113	38.1	M16;深deep 24	23.7
180	265	137	38.1	M16;深deep 24	23.7

串 泵 Tandem (Double,Triple) Pump

LA4V通轴驱动尺寸 Through Drive Dimension

ISO 80, 4孔；用于安装 LA10VSO 140(花键轴 S)–参见 RC 92711 订货型号 **KB7**
ISO 80, 4 hole; for installation of LA4VSO 140(splined shaft S), Reference RC 92711 order code **KB7**

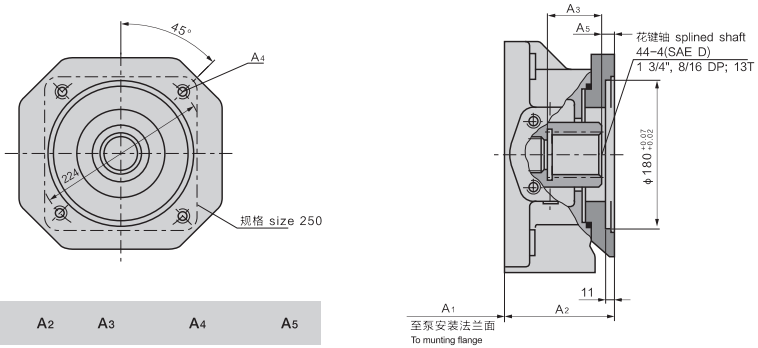

主泵规格 primary pump size	A1	A2	A3	A4	A5
250	327	142	82	M16;深deep 32	10.8
355	327	171	82	M16;深deep 32	10.8

法兰 SAE82-2(SAE A,2孔)；用于安装外啮合齿轮泵 G2(参见 RC 10030),
或内啮合齿轮泵 1 PF2GC2/3-1X/XXXXR07MU2(参见 RC 10215)
订货型号 K01
Flange SAE82-2 (SAE A, 2 holes); for installation of external gear pump G2
Or internal gear pump 1 PF2GC2/3-1X/XXXXR07MU2 order code **K01**

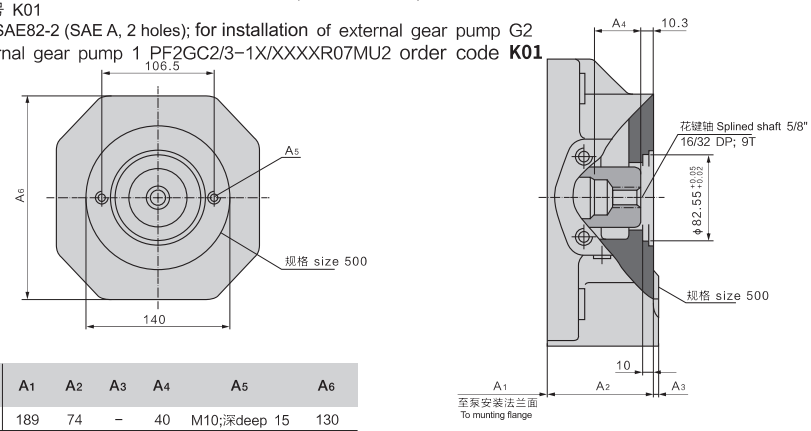

主泵规格 primary pump size	A1	A2	A3	A4	A5	A6
40	189	74	–	40	M10;深deep 15	130
71	216	75	2	37	M10;深deep 15	140
125	265	82	8	39	M10;深deep 20	150
180	265	106	–	28	M10;深deep 15	–
250	327	104	3	50	M10;深deep 15	200
355	327	133	–	50	M10;深deep 15	220
500	365	140	12	62	M10;深deep 15	–
750	365	190	–	62	M10;深deep 15	–

串 泵 Tandem (Double,Triple) Pump

LA4V通轴驱动尺寸 Through Drive Dimension

法兰 SAE 82-2(SAE A,2孔)；用于安装 LA10VSO 18轴S(参见RC 92712) 订货型号 **K52**
Flange SAE 82-2 (SAE A, 2 holes); for installation of LA10VSO 18 shaft S order code **K52**

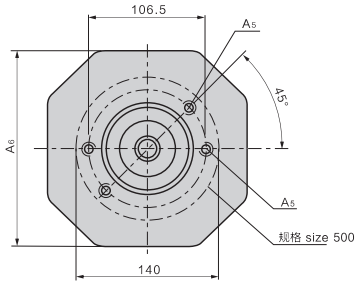

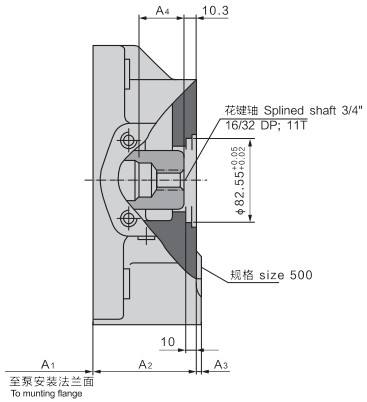

主泵规格 primary pump size	A1	A2	A3	A4	A5	A6
40	189	74	–	40	M10;深deep 15	130
71	216	75	2	37	M10;深deep 15	140
125	265	82	8	39	M10;深deep 20	150
180	265	104	3	50	M10;深deep 15	200
250	327	106	–	28	M10;深deep 15	–
355	327	133	–	50	M10;深deep 15	220
500	365	140	12	62	M10;深deep 15	–

法兰 SAE 101-2(SAE B,2孔)；用于安装外啮合齿轮泵G3(参见RC 10039)订货型号 **K02**
Flange SAE 101-2 (SAE B, 2 holes); for installation of external gear pump G3 order code **K02**

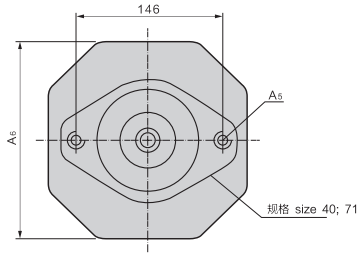

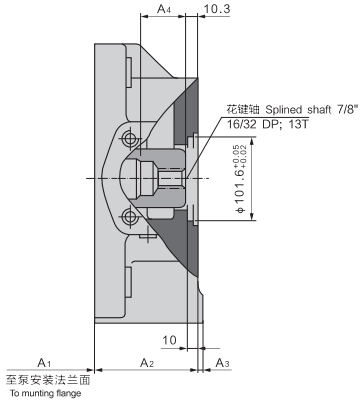

主泵规格 primary pump size	A1	A2	A3	A4	A5	A6
40	189	101	–	64	M12;深deep 26	–
71	216	106	–	64	M12;深deep 30	–
125	265	82	8	39	M12;深deep 15	150
180	265	106	–	39	M12;深deep 15	160
250	327	104	3	50	M12;深deep 18	200
355	327	133	–	50	M12;深deep 18	220
500	365	140	–	62	M12;深deep 18	240

串 泵 Tandem (Double,Triple) Pump

LA4V通轴驱动尺寸 Through Drive Dimension

法兰 SAE101-2(SAE B,2孔)；用于安装LA10VO45 轴 S(参见 RC 92701),
或齿轮泵 1 PF2GC4-1X/0XXXR07MU2(参见 RC 10215) 订货型号 **K04**
Flange SAE101-2 (SAE B, 2 holes); for installation of LA10VO45 shaft S
Or gear pump 1 PF2GC4-1X/0XXXR07MU2
order code **K04**

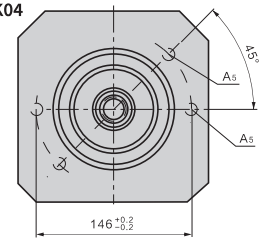

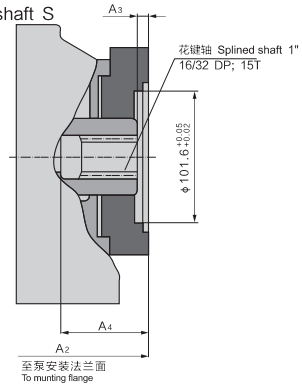

主泵规格 primary pump size	A2	A3	A4	A5
125	347	9	48.4	M12;深deep 15
250	431	10.4	61	M12;深deep 18
355	460	10.4	52.4	M12;深deep 18

第二泵的液压油请参见 RC 数据表。

法兰 SAE101-2(SAE B,2孔)；用于安装内啮合齿轮泵
1PF2GC5-1X/0XXXR07MU2(参见 RC 10215)
订货型号 **K06**
Flange SAE101-2 (SAE B, 2 holes); for installation of internal
gear pump 1PF2GC5-1X/0XXXR07MU2
order code **K06**

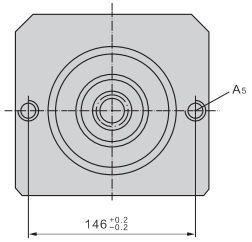

剖视图 View A-B

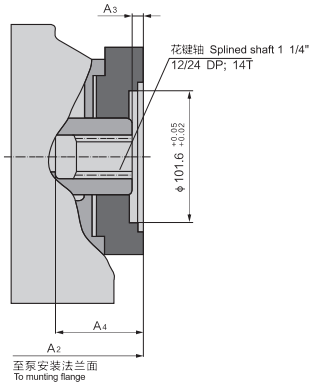

主泵规格 primary pump size	A2	A3	A4	A5
71	321	10.5	59.5	M12
125	378	9	56.6	M12;深deep 18

串 泵 Tandem (Double,Triple) Pump

LA4V通轴驱动尺寸 Through Drive Dimension

法兰 SAE127-2(SAE C,2孔); 用于安装LA10VO 100 轴 S(参见 RC 92701),
或内啮合齿轮泵 1 PF2GC6-1X/XXXXR07MU2(参见 RC 10215)

订货型号 **K24**

Flange SAE127-2 (SAE C, 2 holes); for installation of LA10VO 100 shaft S or internal gear pump 1 PF2GC6-1X/XXXXR07MU2

Order code **K24**

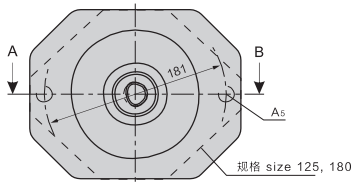

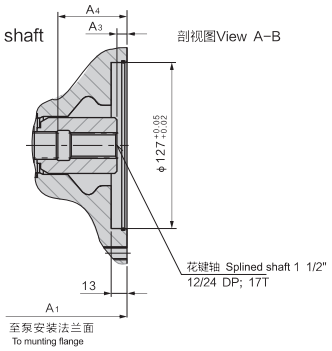

主泵规格 primary pump size	A1	A3	A4	A5
125	377	9	74	M16;深deep 24
180	401	10	72	M16;深deep 24
250	451	10.5	76	M16;深deep 20

ϕ 63公制, 4孔; 用于安装径向柱塞泵 R4 (参见 RC 11263)
订货型号 **K57**
ϕ 63 metric, 4 holes; for installation of radial piston pump R4
order code **K57**

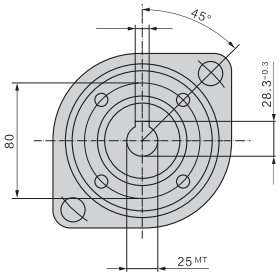

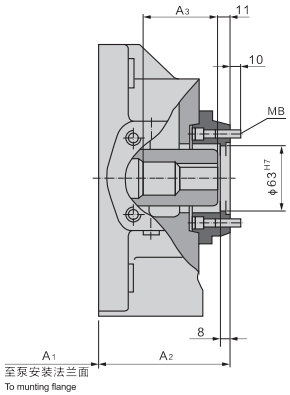

主泵规格 primary pump size	A1	A2	A3
40*	189	100	61
71*	216	103	56
125	265	110	62
250	327	132	78

* 对于LA4VSO 40和71 LR.D、LR.S和LR.G,
只能安装一台R 4-3

串 泵 Tandem (Double,Triple) Pump

LA4V通轴驱动尺寸 Through Drive Dimension

法兰 SAE101-2(SAE B,2孔); 用于安装外啮合齿轮泵(参见 RC 10042),
或LA10VO 28 花键轴 S (参见 RC 92701) 订货型号 **K68**
Flange SAE101-2 (SAE B, 2 holes); for installation of external gear pump or LA10VO 28 spline shaft S
Order code **K68**

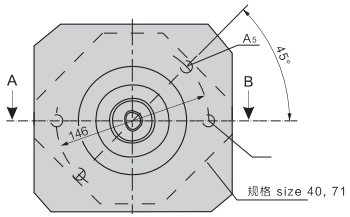

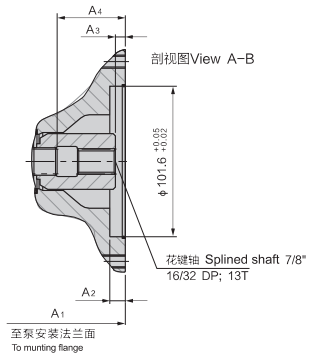

主泵规格 primary pump size	A1	A2	A3	A4	A5
40	290	10.3	10	47	M12
71	322	10.3	10	62	M12
125	355	10	9	49	M12;深deep 15
180	371	10.3	10	49	M12;深deep 15
250	431	11	10	47	M12;深deep 26
500	505	10.3	10	78	M12

带通轴驱动轴，以盖板堵住 订货型号 **K99** 公称规格 500
Drive shaft with through shaft, blocked by cover plate, Order code **K99**
Displacement 500

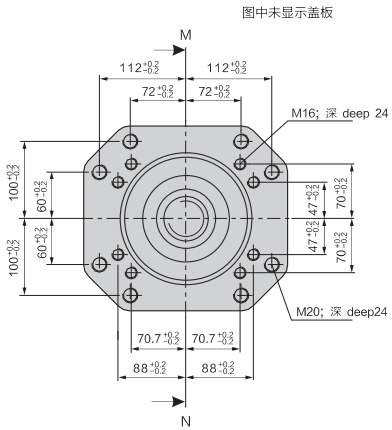

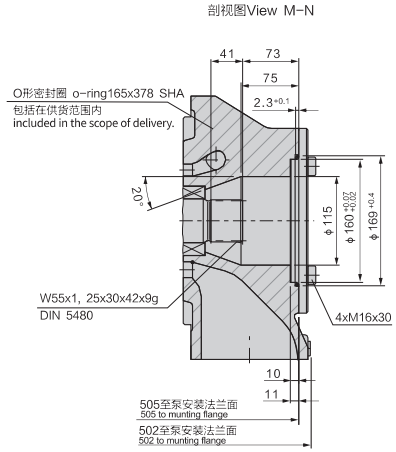

串 泵 Tandem (Double,Triple) Pump

LA4V通轴驱动尺寸 Through Drive Dimension

带通轴驱动轴，以盖板堵住，订货型号 **K99**
公称规格 40-355
Drive shaft with through shaft, blocked by cover plate Order code **K99**
Displacement 40-355

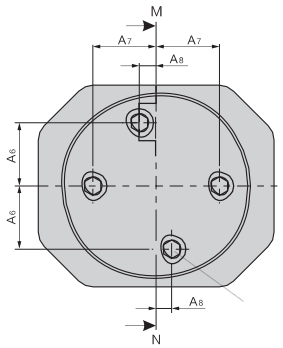

图解适用于规格 71
Illustration applies to 71cc

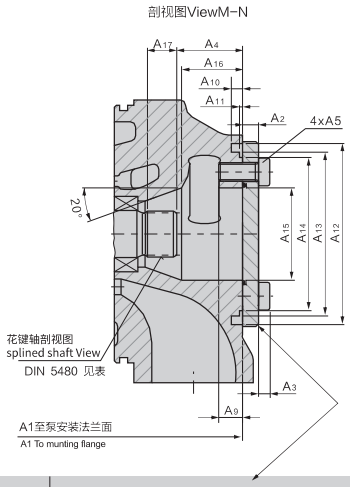

主泵规格 primary pump size	花键轴剖面 DIN 5480 splined shaft View DIN 5480
40	W25×1, 25×30×18×9g
71	W30×1, 25×30×22×9g
125	W35×1, 25×30×26×9g
180	W35×1, 25×30×26×9g
250	W42×1, 25×30×32×9g
355	W42×1, 25×30×32×9g

主泵规格 primary pump size	O形密封图（不包括在供货范围内） O ring (Not included in the scope of delivery.)
40	99×3 78 SH A
71	PRP 245 7509
125	119×3 78 SH A
180	119×3 78 SH A
250	162×3 78 SH A
355	162×3 78 SH A

主泵规格 primary pump size	A1	A2	A3	A4	A5	A6	A7	A8	A9	A10	A11	A12	A13	A14	A15	A16	A17
40	263	10	7.5	51.3±1	M12x25	37±0.2	37±0.2	0	18	9	2.3+0.1	ϕ118	ϕ105g6	ϕ97.6-0.4	ϕ52	44	14
71	291	10	7.5	48±1	M12x25	42.3	45±0.15	15.4±0.15	18	9	2.7+0.1	ϕ130	ϕ116g6	ϕ106.4-0.4	ϕ63	38	16
125	347	12	8.5	49.7±1	M14x30	47±0.15	47±0.15	0	18	8.5	2.3+0.1	ϕ137	ϕ124g6	ϕ116-0.4	ϕ70	46	22
180	371	12	8.5	49.7±1	M14x30	47±0.15	47±0.15	0	18	8.5	2.3+0.1	ϕ137	ϕ124g6	ϕ116-0.4	ϕ70	46	25
250	431	15	12	61.4±1	M20x40	63±0.15	63±0.15	0	26	9	2.3+0.1	ϕ180	ϕ165g6	ϕ157-0.4	ϕ88	64	30.5
355	460	15	12	61.4±1	M20x40	63±0.15	63±0.15	0	26	9	2.3+0.1	ϕ180	ϕ165g6	ϕ157-0.4	ϕ88	64	34

LA10VSO 31系列

轴向柱塞变量泵

LA10VSO 31series Axial piston variable pump

适用于开式回路液压系统
Used for hydraulic drives in open loop ciruits

产品特点
斜盘轴向柱塞变量泵;
可通过调节斜盘角度来实现无级变量;
优异的吸入特性;
具备结构设计紧凑，重量轻，低噪音特点;
控制响应灵敏;
液压泵的流量正比于泵的转速和排量;
额定工作压力可达到28MPa;
选用长寿命，高精度轴承;
静压平衡滑靴提高使用寿命;
驱动轴能承受轴向和径向负载。

Features
Swashplate axial piston pump.
Adjust the angle of swashplate to realize the stepless variable.
Good suction characteristic.
Have the structural design of compact, light weight, low noise characteristics.
The sensitivity of control system.
Flow is proportional to the drivek speed and to the displacement.
Nominal pressure reach to 28 Mpa.
Long service life, high-precision bearings.
Hydrostatic balance slipper, improve the life of pump.
Axial and radial loading of drive shaft possible

LA10VSO 轴向柱塞变量泵 Axial piston variable pump

型号说明 Model Description

LA10V(S)

泵型号：变量泵，斜盘式结构 Model variable pump, swashplate design
额定压力280bar Rated pressure 280bar
峰值压力350bar Peak pressure 350bar

O

运行模式：泵，开式回路 Mode of oper ation pump, open circuit

28

规格排量：18、28、45、71、100、140 (ml/r) Displacement: 18、28、45、71、100、140 (ml/r)

DR

控制方式	18	28	45	71	100	140
DG--两柱控制	√	√	√	√	√	√
DR--恒压控制	√	√	√	√	√	√
DRG--远程恒压控制	√	√	√	√	√	√
DFR--压力/流量控制	√	√	√	√	√	√
DFR1--压力/流量控制，X口关闭	√	√	√	√	√	√
DFLR--压力/流量/功率控制		√	√	√	√	√

/

31

产品系列：31系列 Product series: 31 series

-

R

转向（从轴端看）：Direction of Rotation
R--顺时针 Clockwise
L--逆时针 Anti-clockwise

P

密封件：Seale
P-丁腈橡胶 Perbunan
V-氟橡胶 Viton

S

轴端型式 Shaft end	18	28	45	71	100	140
P-公制平键 Metric parallel with key	√	√	√	√	√	√
S-SAE花键 SAE splined	√	√	√	√	√	√
R-SAE花键(较高通轴驱动扭矩) SAE splined(higher through drive torque)	√	√	√	√		
K-SAE平键 SAE parallel with key	√	√	√	√	√	√
U-SAE 小花键 SAE splined reduced dia, Not for through drive	√		√		√	
W-SAE 小花键（较高不通轴驱动扭矩） Similar to shaft "U", higher input torque, not for through drive			√		√	

C

安装法兰 Mountng flange	18	28	45	71	100	140
A-ISO 两孔 ISO 2-hole	√	√	√	√	√	
C-SAE 两孔 SAE 2-hole	√	√	√	√	√	
B-ISO四孔 ISO 4-hole						√
D-SAE四孔 SAE 4-hole						√

LA10VSO 轴向柱塞变量泵 Axial piston variable pump

62

油口型式 Port for service lines	18	28	45	71	100	140
11--后面SAE, 公制螺纹 SAE flange rear, fixing thread metric		√	√	√	√	√
61--后面SAE, NUC螺纹 SAE flange rear, fixing thread NUC		√	√	√	√	√
12--两侧SAE, 公制螺纹 SAE flange on opposite side, fixing thread metric	√	√	√	√	√	√
62--两侧SAE, NUC螺纹 SAE flange on opposite NUC	√	√	√	√	√	√
41(91)--后面SAE, 公制（NUC）螺纹 SAE flange rear, fixing thread metric (NUC)				√		
42(92)--两侧SAE, 公制（NUC）螺纹 SAE flange on opposite side, fixing thread metric (NUC)				√		

N00

通轴型式 With through drive to accept an axial piston pump or gear pump	18	28	45	71	100	140	
不通轴 Without through drive	√	√	√	√	√	√	N00

技术数据 Technical Data

进油口工作压力范围 Operating pressure range-inlet

进油口（S口）的绝对压力 Absolute pressure at pore S

Pabs min 0.8 bar

Pabs max 30 bar

壳体泄油压力 Case drain pressure

泄油口（L，L1）最大允许压力；最高可比进油口压力高0.5bar，但不高于2bar 的绝对压力。

Maximum permissible pressure of leakage fluid (at port L, L1): Maximum 0.5 bar higher than the inlet pressure at port S, but nohigher than 2 bar absolute.

进油口工作压力范围 Operating pressure range-inlet

进油口（B口）压力 Pressure at pore B

公称压力 Nominal pressure PN 280 bar

峰值压力 Peak pressure Pmax 350 bar

间隙工作压力（占10%循环周期） 315 bar

Applications sith intermittent operating pressures up to 315 bar at 10% duty are permissible.

规格 Size				18	28	45	71	100	140
排量 Displacement		V_{gmax}	cm^3	18	28	45	71	100	140
最高转速 Max.speed		n_{max}	rpm	3300	3000	2600	2200	2000	1800
最大流量 Max.Output flow	在 in n_{max}	q_v	L/min	59.4	84	117	156	200	252
	在 in 1500r/min	q_v	L/min	27	42	68	107	150	210
最大功率 （△p=280bar） Max.power	在 in n_{max}	P_{max}	kW	27.7	39	55	73	93	118
	在 in 1500r/min	P_{max}	kW	12.6	20	32	50	70	98
最大扭距 （△p=280bar） Max.torque	在 in V_{gmax}	T_{max}	Nm	80.1	125	200	316	445	623
重量 Weigh		m	kg	12	15	21	33	45	60

LA10VSO 轴向柱塞变量泵 Axial piston variable pump

参数计算

流量 Flow $q_v = \frac{V_g \cdot n \cdot \eta_v}{1000}$ [L/min]

驱动扭矩 Drive torque $T = \frac{1{,}59 \cdot V \cdot \triangle P}{100 \cdot \eta_{mh}} = \frac{V_g \cdot \triangle P}{20\pi \cdot \eta_{mh}}$ [N.m]

驱动功率 Drive power $p = \frac{T \cdot n}{9549} = \frac{2\pi \cdot T \cdot n}{60000} = \frac{q_v \cdot \triangle p}{600 \cdot \eta_t}$ [kW]

V_g =每转几何排量 Geometry displacement each rotate [cm³]

$\triangle p$ =压差 Pressuredrop/differential [bar]

n =转速 Rotary speed [rpm]

η_v =容积效率 Cubage's efficiency

η_{mh} =机械液压效率 Mehanical hydraulic efficiency

η_t =总效率($\eta_t = \eta_v \cdot \eta_{mh}$) Overall efficiency

控制方式 Operation Mode

DG – 两点式变量，直接控制

通过在油口X施加一外部切换压力使变量泵达到最小摆角。
控制油可直接供给控制活塞；
需要的最小压力为50bar。

泵只能在 $V_{g\,max}$ 或 $V_{g\,min}$ 之间切换。
注意，油口X所需的切换压力与油口B的实际工作压力 P_B 直接相关。(参见切换压力图)
控制压力 P_{st} 在X=0 bar ≙ $V_{g\,max}$
控制压力 P_{st} 在X≥50 bar ≙ $V_{g\,min}$
最大允许切换压力 P_{st} 为280bar

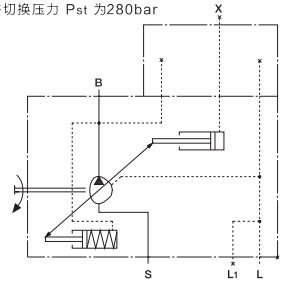

DG – Two-point control, direct operated

The variable pump can be set to a minimum swivel angle by connecting an external switching pressure to port **X.**
This will supply control fluid directly to the stroking piston; a minimum control pressure of $p_{st} \geq 50$ bar is required.
The variable pump can only be switched between $V_{g\,max}$ or $V_{g\,min}$.
Please note that the required control pressure at port **X** is directly dependent on the actual working pressure p_B in port **B**. (See control pressure characteristic curve).

Control pressure P_{st} at X=0 bar ≙ $V_{g\,max}$

Control pressure P_{st} at X≥50 bar ≙ $V_{g\,min}$

The maximum permissible switching pressure is 280 bar.

▼ 切换压力图
Switching pressure characteristic curve

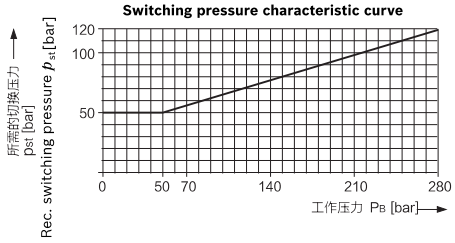

油口

B	压力油口	Working port
S	吸油口	Suction port
L, L1	泄油口 (L1 关闭)	Drain port (L1 close)
X	控制油口 (关闭)	Pilot pressure port (close)

LA10VSO 轴向柱塞变量泵 Axial piston variable pump

DR – 压力控制 Pressure control

在泵的控制范围内，恒定控制将液压系统中的压力保持恒定。因此，泵只提供执行器所需的液压油量。压力可在控制阀中无级设定。
In the control range of the pump, the pressure in the hydraulic system is kept constant.Therefore, the pump only provides the hydraulic oirequired for the actuator. Pressure can be set in the control valve.

规格 Size 18...100

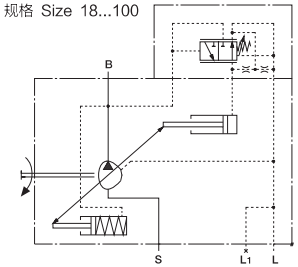

规格 Size 140

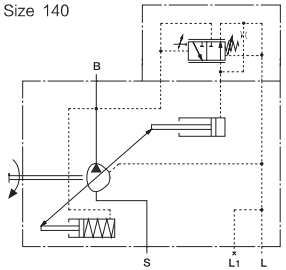

静态特性曲线 Characteristic curve
(n_1=1500 rpm; t_{oil}=50℃时)

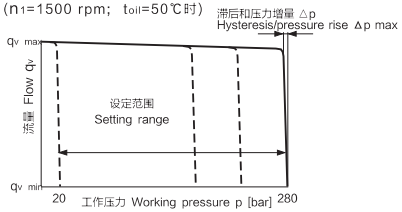

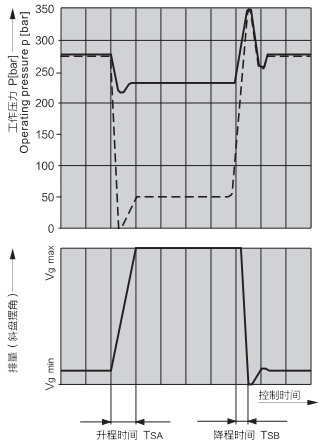

动态特性
左侧曲线显示了测试条件下的平均没量值。
条件：n=1500 rpm; t_{oil}=50℃时
管路主溢流阀设在 350bar
使用距离泵压力出油口下游1m的溢流阀，
迅速开启或关闭压力管路，可实现分级负载。
Left curve shows the average value of the test conditions.
Condition: n=1500rpm; toil=50℃
The main overflow valve is located in 350bar
Using the distance pump pressure from the oil port downstream 1m of the overflow valve, quickly open or close the pressure line, can achieve the classification load.

油口

B	压力油口	Working port
S	吸油口	Suction port
L, L1	泄油口 (L1 关闭)	Drain port (L1 close)

控制数据 Controller data
滞后和重复精度 △p_____最大值 3bar
Hysteresis and repeatability Δp [bar] maximum 3 bar

最大压力增量 Pressure increase

规格 Size	18	28	45	71	100	140
△p bar	4	4	6	8	10	12

控制油耗_____最大约 3L/min
Pilot fluid consumption [l/min] maximum approx. 3L/min

控制时间 Controller time

规格 Size	18	28	45	71	100	140
t_{SA}[ms] 50bar 时	50	60	80	100	125	130
t_{SA}[ms] 220bar 时	25	30	40	50	90	110
t_{SA}[ms] 零排量280bar	20	20	20	25	30	30

LA10VSO 轴向柱塞变量泵 Axial piston variable pump

DRG – 远程压力控制 Remote pressure control

恒压控制的功能和装置与DR相同
可在外部将一个溢流阀与油口X相连来实现远程控制。但是，该溢流阀不包括在DRG控制的供货范围内。DRG控制阀芯的标准压差设在 20bar，此压差产生1.5L/min 的控制流量。如需其它设定值，请用文字说明。我们推荐使用下列其中一种作为单独的溢流阀：按RC25402的DBD6(液控)，或按RC29166的DBETR-SO381，P中带节流孔ϕ0.8（电控）。管道的最大长度不得超过2m。

The remote control can be relized by connecting an overflow valve with the oil port X. However, the overiow valve is not included in the DRG control of the supply range. DRG control vave core standard pressure is located in 20bar , the pressure difference generated 1.5L/min control flow.For other settings, please use the text description. We recommend using the folowing one as a separate relief valve: according to the RC25402 of DBD6 (hydraulic), or by RC29166 DBETR-SO381,P with throttle hole whose diamet- is o0.8(control). The maximum length of the pipe shall not exceed 2m.

规格 Size 18...100

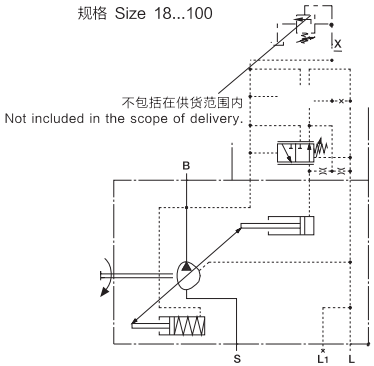

规格Size 140

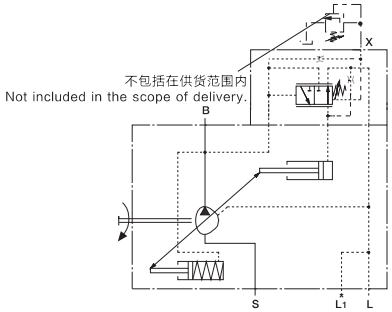

静态特性
(n_1=1500 rpm; t_{oil}=50℃时)

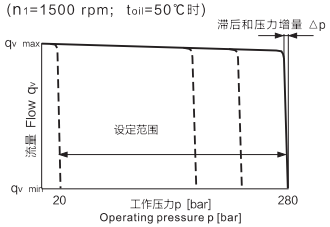

油口

B	压力油口	Working port
S	吸油口	Suction port
L, L1	泄油口 (L1 关闭)	Drain port (L1 close)
X	控制油口	Pilot pressure port

控制数据 Controller data

滞后 △p_____最高 3bar
Hysteresis Δp_____maximum 3 bar

最大压力增量 Pressure increase

规格 Size	18	28	45	71	100	140
△p bar	4	4	6	8	10	12

控制油耗_____约 3L/min
Pilot fluid consumption _____approx. 3L/min

NVICKS® 威克斯液压 VICKS HYDRAULIC

LA10VSO 轴向柱塞变量泵 Axial piston variable pump

DFR/DFR1 – 压力/流量控制 Pressure / flow control

除了压力控制功能之外，还可通过压差（如节流孔或换向阀上的压差）调节泵流向执行元件的流量。泵只提供执行器所需的油液。在DFR1型上，油口X与油箱之间的节流孔被堵住。

In addtion to the pressure control function, but also through the differential pressure (such as the throttle valve or vave on the pressure difference) to regulate the fiow of the pump fow.Pump to provide the oil needed for the actuator.In the DFR1 type, the throtle hole betweenthe oil port X and the fuel tank is blocked.

规格 Size 18...100

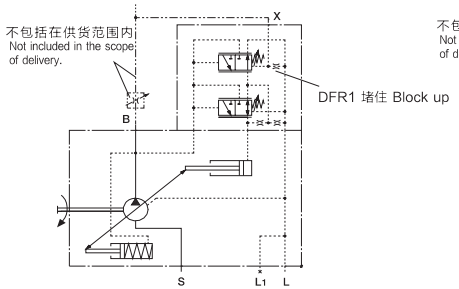

规格 Size 140

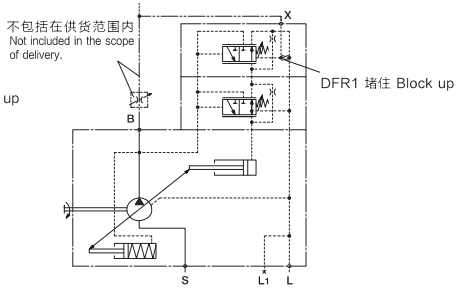

静态特性曲线 Characteristic curve
(n_1=1500 rpm; t_{oil}=50℃时)

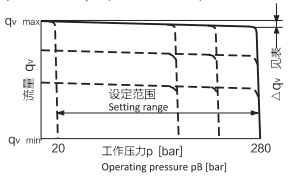

变转速情况下的静态特性曲线
Characteristic curve at variable rotational speed

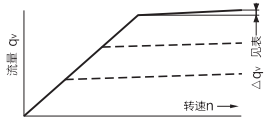

流量控制的动态特性曲线所示曲线是在测试条件下测量的平均值。
Characteristic curve valid at n1 = 1500 rpm and θ fluid = 50 ° C.

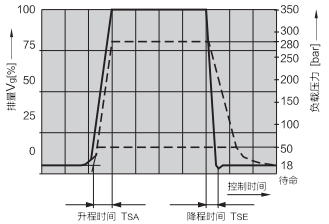

控制时间

规格 Size	18	28	45	71	100	140
t_{SA}[ms] 待命-280bar	40	40	50	60	120	130
t_{SA}[ms] 280bar 待命	15	20	25	30	60	60
t_{SA}[ms] 50bar 待命	40	40	50	60	120	130

油口

B	压力油口	Working port
S	吸油口	Suction port
L, L1	泄油口 (L1 关闭)	Drain port (L1 close)
X	先导压力油口	Pilot pressure port

压差 △p:
标准设定值：14bar，如需其它设定值，请用文字说明。
X油口卸载通油箱时（出油口B关闭），将产生一个p=18±2bar的零排量压力。（待命压力取决于△p）

Differential pressure Δp:
▶ Standard setting: 14 bar
If another setting is required, please state in plain text.
▶ Setting range: 14 bar to 22 bar
Relieving the load on port X to the reservoir results in a zero stroke ("standby") pressure which lies about 1 to 2 bar higher than the defined differential pressure Δp, however, system influences are not taken into account.

控制数据
压力控制的技术参数参见第39页。最大流量偏差（滞后和升高）是在驱动转速n = 1500rpm时测量的：

Controller data
DR pressure controller data see page 39. Maximum flow deviation measured at drive speed n = 1500 rpm.

规格 Size	18	28	45	71	100	140
$\triangle q_{Vmax}$ L/min	0.9	1.0	1.8	2.8	4.0	6.0

LA10VSO 轴向柱塞变量泵 Axial piston variable pump

DFLR – 压力/流量/功率控制 Pressure / flow /power control

为了在工作压力变化的情况下获取恒定的驱动扭矩，通过改变轴向柱塞元件的摆角，从而改变输出流量，使流量和压力的乘积保持恒定。
流量控制只能在恒功率控制曲线以下。
In order to obtain a constant driving torque in the case of working pressure change, by changing the angle of the axial piston element,thus changing the ouput fow, so that the product of fiow and pressure remain constant. Flow control can only be in the constant powercontrol curve.

规格 Size 28...100

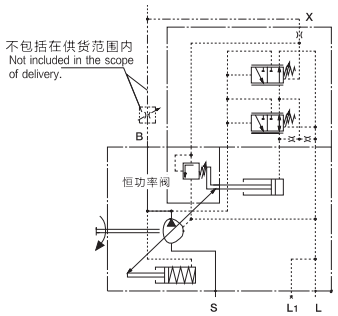

规格 Size 140

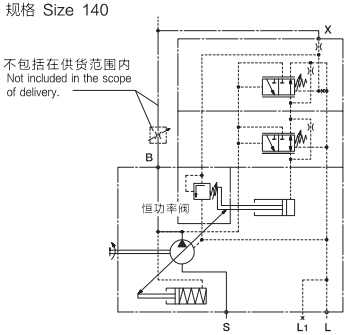

静态特性曲线 Characteristic curve

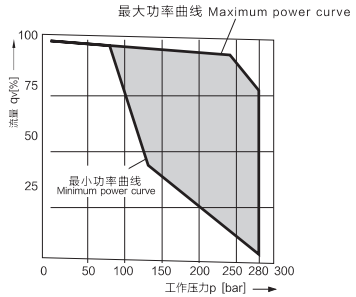

功率特性由工厂设定，因此请用文字说明细节，
如1500rpm时为20kW。
When ordering please state the power characteristics to be set at the factory in plain text, e.g. 20 kW at 1500 rpm.

控制数据

压力控制的技术参数参见第39页。
流量控制的技术参数参见第41页。
控制起点_____从80bar起
控制油耗_____最大约5.5L/min
q_{vmax}时的流量损失参见第41页。

For technical data of pressure controller DR see page 39 .
For technical data of flow controller FR see page 41.
Beginning of control at < 80 bar
Control fluid consumption approx. 5.5 l/min max.

油口

B	压力油口 Working port
S	吸油口 Suction port
L, L1	泄油口 (L1 关闭) Drain port (L1 close)
X	控制压力油口 Pilot pressure port

LA10VSO 轴向柱塞变量泵 Axial piston variable pump

液压泵规格尺寸 Dimensions & Size

安装连接尺寸规格18 Installation and connection size 18
N00型无控制阀 N00 without valve

轴 shaft P

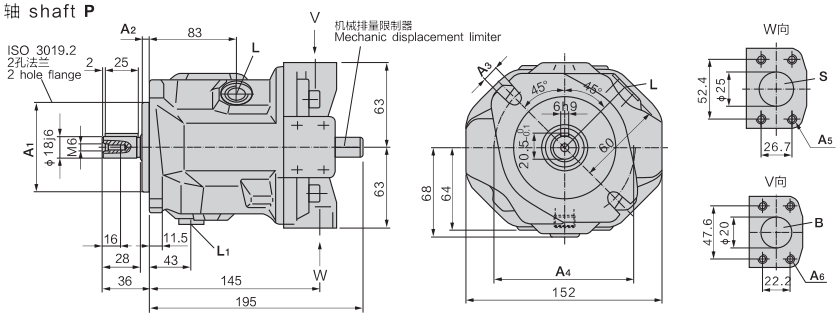

轴 shaft S

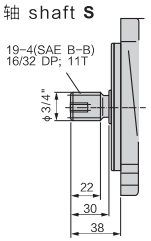

轴 shaft U

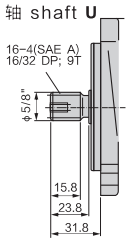

轴 shaft K

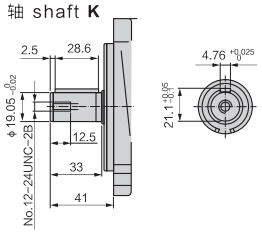

B	压力油口	SAE 3/4"	(标准压力范围)	Working port (standard pressure series)
S	进油口	SAE 1"	(标准压力范围)	Suction port (standard pressure series)
L/L1	壳体泄油口	(L1口在工厂已堵死)		Drain port (L1 as been blocked in the factory.)

规格 Size	A1	A2	A3	A4	A5	A6	油口 port L/L1
18ISO	ϕ80h8	7	11	ϕ109	4-M10 深 deep 17	4-M10 深 deep 17	M16×1.5
18SAE	ϕ82.55h8	6.3	11	ϕ106.4	4-3/8-16UNC-2B 深 deep 20	4-3/8-16UNC-2B 深 deep 20	9/16-18UNF-2B

LA10VSO 轴向柱塞变量泵 Axial piston variable pump

液压泵规格尺寸 Dimensions & Size

安装连接尺寸规格28 Installation and connection size 28

N00型无控制阀 N00 without valve

轴 shaft P

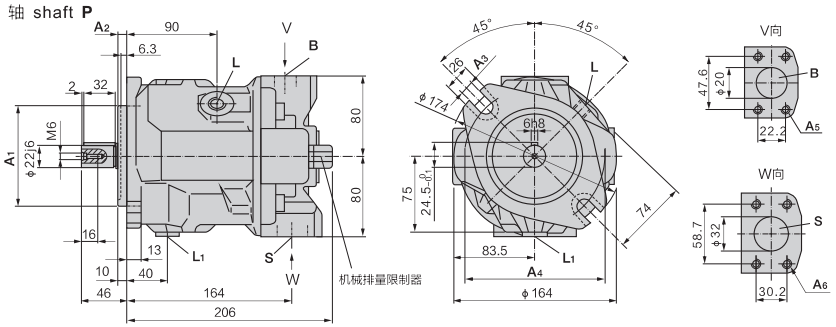

轴 shaft K

轴 shaft 22-1; (SAE B)
ISO 3019-1

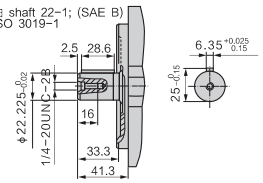

轴 shaft S

轴 shaft 22-4; (SAE B)
SAE J744 OCT83

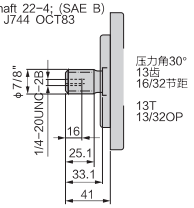

轴 shaft R

轴 shaft 22-4; (SAE B)
SAE J744 OCT 83

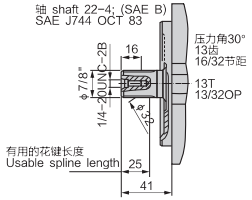

B	压力油口	SAE 3/4"	(标准压力范围)	Working port (standard pressure series)
S	进油口	SAE 1"	(标准压力范围)	Suction port (standard pressure series)
L/L1	壳体泄油口	(L1口在工厂已堵死)		Drain port (L1 as been blocked in the factory.)

规格 Size	A1	A2	A3	A4	A5	A6	油口 port L/L1
28ISO	φ100h8	9	14	φ140	4-M10 深 deep 17	4-M10 深 deep 17	M18×1.5
28SAE	φ101.6h8	9.5	φ14	φ146	4-3/8-16UNC-2B 深 deep 18	4-7/16-14UNC-2B 深 deep 24	3/4-16UNF-2B

LA10VSO 轴向柱塞变量泵 Axial piston variable pump

液压泵规格尺寸 Dimensions & Size

安装连接尺寸规格45 Installation and connection size 45

N00型无控制阀 N00 without valve

轴 shaft P

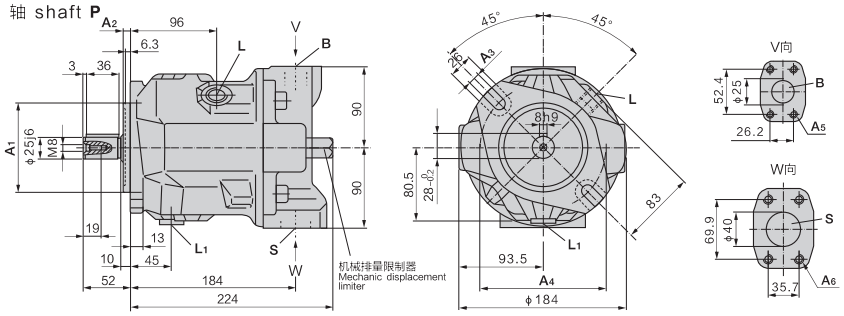

轴 shaft K

轴 shaft 25-1; (SAE B-B)
ISO 3019-1

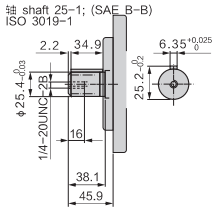

轴 shaft S

轴 shaft 25-4; (SAE B-B)
SAE J744 OCT83

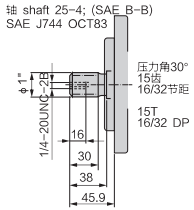

轴 shaft R

轴 shaft 25-4; (SAE B-B)
SAE J744 OCT 83

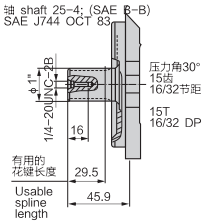

轴 shaft U

轴 shaft 22-4; (SAE B)
SAE J744 OCT 83

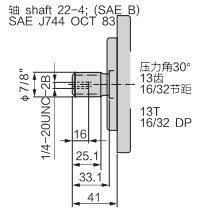

B	压力油口	SAE 3/4"	(标准压力范围)	Working port (standard pressure series)
S	进油口	SAE 1"	(标准压力范围)	Suction port (standard pressure series)
L/L1	壳体泄油口	(L1口在工厂已堵死)		Drain port (L1 as been blocked in the factory.)

规格 Size	A1	A2	A3	A4	A5	A6	油口 port L/L1
45ISO	φ100h8	9	14	φ140	4-M10 深 deep 17	4-M12 深 deep 20	M22×1.5
45SAE	φ101.6h8	9.5	φ14	φ146	4-3/8-16UNC-2B 深 deep 18	4-1/2-13UNC-2B 深 deep 22	7/8-14UNF-2B

LA10VSO 轴向柱塞变量泵 Axial piston variable pump

液压泵规格尺寸 Dimensions & Size

安装连接尺寸规格71 Installation and connection size 71

N00型无控制阀 N00 without valve

轴 shaft **P**

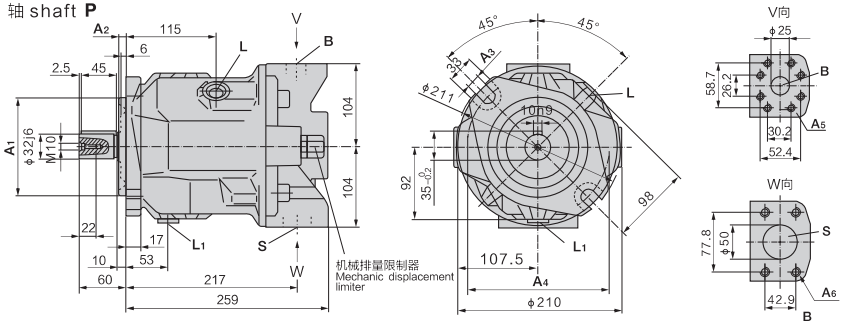

轴 shaft **K**

轴32-1; (SAE C)
ISO 3019-1

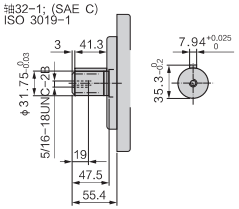

轴 shaft **S**

轴32-4; (SAE C)
SAE J744 OCT83

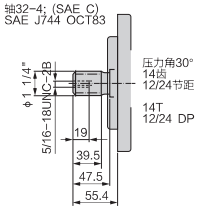

轴 shaft **R**

轴32-4; (SAE C)
SAE J744 OCT 83

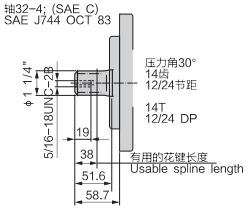

B	压力油口	SAE 3/4"	(标准压力范围)	Working port (standard pressure series)
S	进油口	SAE 1"	(标准压力范围)	Suction port (standard pressure series)
L/L_1	壳体泄油口	(L1口在工厂已堵死)		Drain port (L1 as been blocked in the factory.)

规格 Size	A_1	A_2	A_3	A_4	A_5	A_6	油口 port L/L1
71ISO	φ125h8	9	18	φ180	8-M10 深 deep 17	4-M12 深 deep 20	M22×1.5
71SAE	φ127h8	12.7	φ18	φ181	8-3/8-16UNC-2B 深 deep 18	4-1/2-12UNC-2B 深 deep 22	7/8-14UNF-2B

LA10VSO 轴向柱塞变量泵 Axial piston variable pump

液压泵规格尺寸 Dimensions & Size

安装连接尺寸规格100 Installation and connection size 100

N00型无控制阀 N00 without valve

轴 shaft **P**

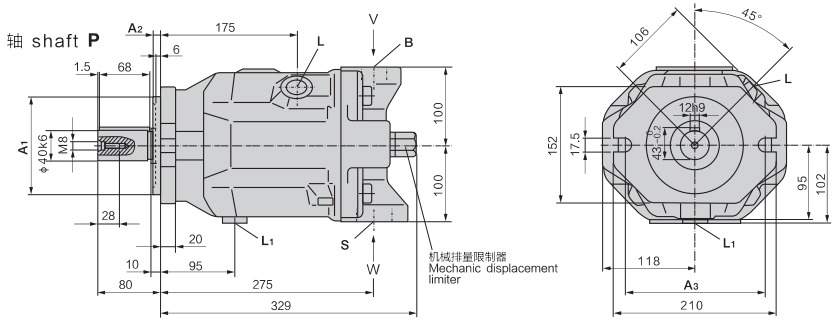

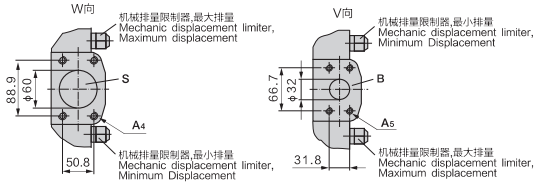

轴 shaft **K**

轴38-1; (SAE C-C)
ISO 3019-1

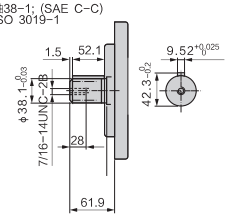

轴 shaft **S**

轴38-4; (SAE C-C)
SAE J744 OCT83

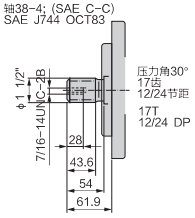

轴 shaft **U**

轴32-4; (SAE C)
SAE J744 OCT 83

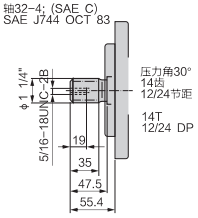

B	压力油口	SAE 1 1/4"	(标准压力范围)	Working port (standard pressure series)
S	进油口	SAE 2 1/2"	(标准压力范围)	Suction port (standard pressure series)
L/L_1	壳体泄油口	(L1口在工厂已堵死)		Drain port (L1 as been blocked in the factory.)

规格 Size	A_1	A_2	A_3	A_4	A_5	油口 port L/L1
100ISO	φ125h8	9	180	4-M12 深 deep 17	4-M14 深 deep 17	M27×2
100SAE	φ127h8	12.7	181	4-1/2-13UNC-2B 深 deep 27	4-1/2-13UNC-28-2B 深 deep 18	1 1/16-12UN-2B

LA10VSO 轴向柱塞变量泵 Axial piston variable pump

液压泵规格尺寸 Dimensions & Size

安装连接尺寸规格140 Installation and connection size 140

N00型无控制阀 N00 without valve

轴 shaft **P**

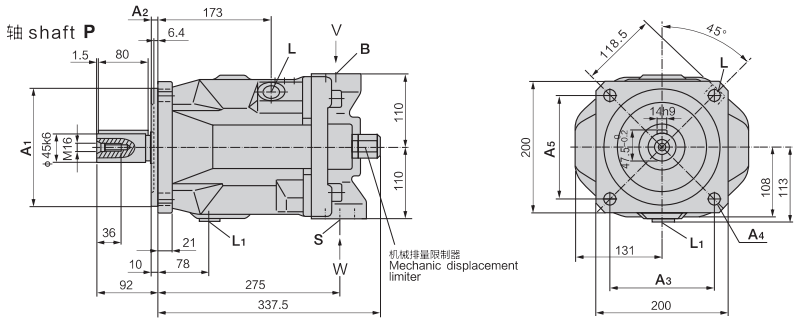

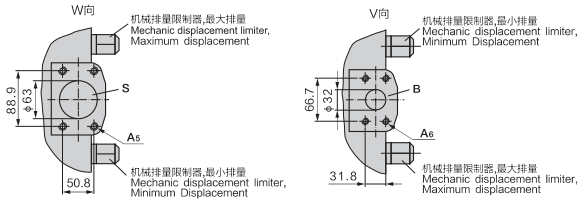

轴 shaft **K**

轴 shaft 44-1; (SAE D)
ISO 3019-1

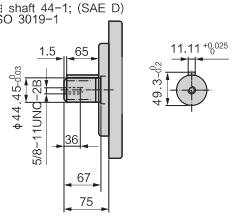

轴 shaft **S**

轴 shaft 44-4; (SAE D)
SAE J744 OCT83

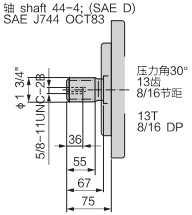

B	压力油口	SAE 1 1/4"	(标准压力范围)	Working port (standard pressure series)
S	进油口	SAE 2 1/2"	(标准压力范围)	Suction port (standard pressure series)
L/L1	壳体泄油口	(L1口在工厂已堵死)		Drain port (L1 as been blocked in the factory.)

规格 Size	A1	A2	A3	A4	A5	A6	油口 port L/L1
140ISO	ϕ180h8	9	158.4	4-ϕ18	4-M12 深 deep 17	4-M14 深 deep 19	M27×1.5
140SAE	ϕ152.4h8	12.7	161.6	4-ϕ20	4-1/2-13UNC-2B 深 deep 27	4-1/2-13UNC-2B 深 deep 19	11/16-12UNF-2B

LA10V

串 泵

Tandem (Double,Triple) Pump

适用于开式回路液压系统
Used for hydraulic drives in open loop ciruits

产品特点
斜盘轴向柱塞变量泵;
可通过调节斜盘角度来实现无级变量;
优异的吸入特性;
具备结构设计紧凑，重量轻，低噪音特点;
控制响应灵敏;
液压泵的流量正比于泵的转速和排量;
额定工作压力可达到28MPa;
选用长寿命，高精度轴承;
静压平衡滑靴提高使用寿命;
驱动轴能承受轴向和径向负载。

Features
Swashplate axial piston pump.
Adjust the angle of swashplate to realize the stepless variable.
Good suction characteristic.
Have the structural design of compact, light weight, low noise characteristics.
The sensitivity of control system.
Flow is proportional to the drivek speed and to the displacement.
Nominal pressure reach to 28 Mpa.
Long service life, high-precision bearings.
Hydrostatic balance slipper, improve the life of pump.
Axial and radial loading of drive shaft possible

串 泵 Tandem (Double,Triple) Pump

LA10V串泵型号说明 Model Description

LA10V(S) 泵型号：变量泵，斜盘式结构 Model variable pump, swashplate design
额定压力280bar Rated pressure 280bar
峰值压力350bar Peak pressure 350bar

O 运行模式：泵，开式回路 Mode of oper ation pump, open circuit

28 规格排量：18、28、45、71、100、140 (ml/r) Displacement: 18、28、45、71、100、140 (ml/r)

DR

控制方式	18	28	45	71	100	140
DG--两位控制	√	√	√	√	√	√
DR--恒压控制	√	√	√	√	√	√
DRG--远程恒压控制	√	√	√	√	√	√
DFR--压力/流量控制	√	√	√	√	√	√
DFR1--压力/流量控制，X口关闭	√	√	√	√	√	√
DFLR--压力/流量/功率控制		√	√	√	√	√

/

31 产品系列：31系列 Product series: 31 series

-

R 转向（从轴端看）：Direction of Rotation
R--顺时针 Clockwise
L--逆时针 Anti-clockwise

P 密封件：Seale
P-丁腈橡胶 Perbunan
V-氟橡胶 Viton

S

轴端型式 Shaft end	18	28	45	71	100	140
P-公制平键 Metric parallel with key	√	√	√	√	√	√
S-SAE花键 SAE splined	√	√	√	√	√	√
R-SAE花键(较高通轴驱动扭矩) SAE splined(higher through drive torque)	√	√	√	√		
K-SAE平键 SAE parallel with key	√	√	√	√	√	√
U-SAE 小花键 SAE splined reduced dia, Not for through drive	√		√		√	
W-SAE 小花键（较高不通轴驱动扭矩） Similar to shaft "U", higher input torque, not for through drive			√		√	

C

安装法兰 Mountng flange	18	28	45	71	100	140
A-ISO 两孔 ISO 2-hole	√	√	√	√	√	
C-SAE 两孔 SAE 2-hole	√	√	√	√	√	
B-ISO四孔 ISO 4-hole						√
D-SAE四孔 SAE 4-hole						√

串 泵 Tandem (Double,Triple) Pump

62

油口型式 Port for service lines	18	28	45	71	100	140
11--后面SAE, 公制螺纹 SAE flange rear, fixing thread metric		√	√	√	√	√
61--后面SAE, NUC螺纹 SAE flange rear, fixing thread NUC		√	√	√	√	√
12--两侧SAE, 公制螺纹 SAE flange on opposite side, fixing thread metric	√	√	√	√	√	√
62--两侧SAE, NUC螺纹 SAE flange on opposite NUC	√	√	√	√	√	√
41(91)--后面SAE, 公制（NUC）螺纹 SAE flange rear, fixing thread metric (NUC)				√		
42(92)--两侧SAE, 公制（NUC）螺纹 SAE flange on opposite side, fixing thread metric (NUC)				√		

N00 通轴型式 With through drive to accept an axial piston pump or gear pump

安装法兰 Mounting flange	轴/轴套 Shaft/Coupling	用于安装 For the mounting of	18	28	45	71	100	140	
ISO80,2 hole	3/4" 19-4(SAE A-B)	LA10VSO10-18(shaft S or R)	√	√	√	√	√	√	KB2
ISO100,2 hole	7/8" 22-4(SAE B)	LA10VSO28(shaft S or R)		√	√	√	√	√	KB3
ISO100,2 hole	1" 25-4(SAE B-B)	LA10VSO45(shaft S or R)			√	√	√	√	KB4
ISO125,2 hole	11/4" 32-4(SAE C)	LA10VSO71(shaft S or R)				√	√	√	KB5
ISO125,2 hole	11/2" 38-4(SAE C-C)	LA10VSO100(shaft S)					√	√	KB6
ISO180,2 hole	13/4" 44-4(SAE D)	LA10VSO140(shaft S)						√	KB7
SAE82-2,2 hole	5/8" 16-4(SAE A)	LA10VSO-18(shaft U),1PF2G2,PGF2	√	√	√	√	√	√	K01
SAE82-2,2 hole	3/4" 19-4(SAE A-B)	LA10VSO10-18(shaft S or R)		√	√	√	√	√	K52
SAE101-2,2 hole	7/8" 22-4(SAE B)	1PF2G3		√	√	√	√	√	K02
SAE101-2,2 hole	7/8" 22-4(SAE B)	LA10VSO28(shaft S or R),PGF3			√	√	√	√	K68
SAE101-2,2 hole	1" 25-4(SAE B-B)	LA10VSO45(shaft S or R),PGH4				√	√	√	K04
SAE127-2,2 hole	11/4" 32-4(SAE C)	LA10VSO71(shaft S or R)				√	√	√	K07
SAE127-2,2 hole	11/2" 38-4(SAE C-C)	LA10VSO100(shaft S),PGH5					√	√	K24
SAE152-4,5 hole	13/4" 44-4(SAE D)	LA10VSO140(shaft S)						√	K17
ISO 80-2	带轴承Φ18		√	√	√	√	√	√	K51
SAE A 82-2	带轴承Φ19.05		√	√	√	√	√	√	K40
ISO 100-2	带轴承Φ22			√	√	√	√	√	K25
SAE B101-2	带轴承Φ22.225			√	√	√	√	√	K03
ISO 100-2	带轴承Φ25				√	√	√	√	K26
SAEB 101-2	带轴承Φ25.4				√	√	√	√	K05
ISO125-2	带轴承Φ32					√	√	√	K27
SAE B 127-2	带轴承Φ31.75					√	√	√	K08
ISO 125-2	带轴承Φ40						√	√	K37
SAE C 127-2	带轴承Φ38.1						√	√	K38
ISO 180-4	带轴承Φ45							√	K59
SAEB152-4	带轴承Φ44.45							√	K21

1、如需在工厂安装第2台力盛泵，则必须用“+”号将两个单泵型号相连。泵1型号代码+泵2型号代码。
订货示例：LA10VO 100DR / 31R-PSC12K07+LA10VO 71DR / 31R-PSC12N00
2、如需在工厂安装一台齿轮泵或径向柱塞泵作为第2泵，请向工厂咨询。

By using combination pumps, it is possible to have independent circuits without the need for splitter gearboxes.
1.When ordering combination pumps, the type designations of the 1st and 2nd pumps must be connected with a “+” and are combined in one part number.
For example: LA10VO100DR/31R-PSC12K07+ LA10VO71DR/31R-PSC12N00
2.If you need to install a gear pump or radial piston pump as the second pump at the factory, please consult your sales representative.

串 泵 Tandem (Double,Triple) Pump

LA10V通轴驱动 Through Drive

最大允许输入扭矩和通轴驱动扭矩 Permissible input and through-drive torques

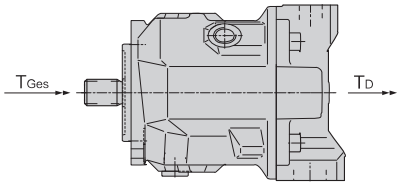

泵1和泵2的驱动扭矩可按需要分开，但是，不得超过最大允许输入扭矩 T_{tot} 以及最大允许通轴驱动扭矩 T_{thr}。
The driving torque of the front pump and the rear pump can be different, but it must not exceed the Maximum input torque at drive shaft and the Maximum through-drive torque.

规格 Size			18	28	45	71	100	140
最大允许输入扭矩 T_{tot} Maximum input torque at drive shaft								
S	T_{tot}	Nm	100	198	319	626	1104	1620
R	T_{tot}	Nm	143	225	400	644	–	–
最大允许通轴驱动扭矩 T_{thr} Maximum through-drive torque								
S	T_{thr}	Nm	80	160	319	492	778	1266
R	T_{thr}	Nm	80	176	365	548	–	–

T_{tot} = 泵1的允许输入扭矩 Allowable input torque of pump 1
T_{thr} = 泵1第2轴伸的允许通轴驱动扭矩 Permissible thru-shaft drive torque of the second shaft extension of pump 1

允许惯性矩 Permissible moment of inertia

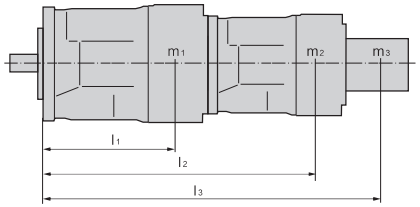

m_1, m_2, m_3 泵重量 Weight kg

l_1, l_2, l_3 至重心的距离 Distance from center of gravity mm

$$T_m=(m_1 \cdot l_1 + m_2 \cdot l_2 + m_3 \cdot l_3) \cdot \frac{1}{102} \quad \text{Nm}$$

规格 Size			18	28	45	71	100	140
允许惯性矩 Permissible moment of inertia	M_{mper}	Nm	500	880	1370	2160	3000	4500
动态加速时 10g 98.1m/sec² Permissible moment of inertia for dynamic mass acceleration 10 g (= 98.1 m/sec2)	M_{mper}	Nm	50	88	137	216	300	450
重量 Weight (LA4VSO...DR)	m	kg	12	15	21	33	45	60
至重心的距离 Distance from center of gravity	L_1	mm	90	10	130	150	160	160

串 泵 Tandem (Double,Triple) Pump

LA10V通轴驱动安装选项一览表 Hub for splined shaft

Flange-LA10V(S)O 法兰 Flange ISO 3019-1	花键套 ISO 3019-1	型号 Code	安装选项-泵2 Mounting op Hons-2nd pump LA10(S)O.../31... 规格（轴）NG(shaft)	LA10(S)O.../52... 规格（轴）NG(shaft)	齿轮泵 gear pump	可提供通轴驱动的规格 Through drive available for size
82-2(A)	16-4(5/8in)	K01	18(U)			18-140
	19-4(3/4in)	K52	18(S和R)	10(S)	AZPF	18-140
101-2(B)	22-4(7/8in)	K02				28-140
		K68	28(S和R) 45(U和W)[1]	28(S和R) 45(U和W)[1]	AZPN/9	28-140
	25-4(1in)	K04	45(S和R)	45(S和R) 60(U和W)[2]	PGH4	45-100
127-2 (C)	32-4(1 1/4in)	K07	71(S和R) 100(S)[3]	85(U和W)[3]	—	71-140
	38-4(1 1/2in)	K24	100(S)	85(S)	PGH5	100-140
152-4 4孔	44-4(1 3/4in)	K17	140(S)		—	140

1）规格28的主泵上无K68通轴驱动 1) Not for main pump NG28 with K68
2）规格45的主泵上无K04通轴驱动 2) Not for main pump NG45 with K04
3）规格71的主泵上无K07通轴驱动 3) Not for main pump NG71 and NG88 with K07

LA10V串泵外形连接尺寸 Mounting Dimension

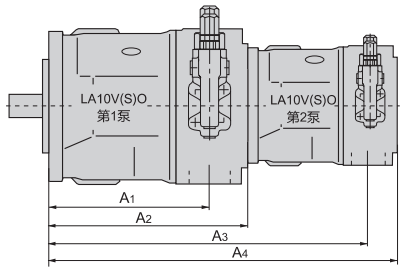

A10V(S)O 第1泵 primary pump	LA10V(S)O 第2泵 2nd pump LA10VSO 18 A1	A2	A3	A4	LA10VSO 28 A1	A2	A3	A4	LA10VSO 45 A1	A2	A3	A4	LA10VSO 71 A1	A2	A3	A4	LA10VSO 100 A1	A2	A3	A4	LA10VSO 140 A1	A2	A3	A4
LA10VSO18	145	182	327	377	165	204	349	399	184	229	374	424	217	267	412	462	275	338	483	533	275	350	495	545
LA10VSO28	-	-	-	-	165	204	369	398	184	229	394	423	217	267	432	461	275	338	503	532	275	350	515	544
LA10VSO45	-	-	-	-	-	-	-	-	184	229	413	448	217	267	451	486	275	338	522	557	275	350	534	569
LA10VSO71	-	-	-	-	-	-	-	-	-	-	-	-	217	267	484	524	275	338	555	595	275	350	567	607
LA10VSO100	-	-	-	-	-	-	-	-	-	-	-	-	-	-	-	-	275	338	631	664	275	350	625	679
LA10VSO140	-	-	-	-	-	-	-	-	-	-	-	-	-	-	-	-	-	-	-	-	275	350	625	688

串 泵 Tandem (Double,Triple) Pump

LA10V通轴驱动尺寸 Through Drive Dimension

法兰82-2（ISO 3019-1）和轴16-4（SAE J744 OCT83）用于安装U型轴伸的LA10VSO18...订货型号 **K01**
Flange 82-2(ISO 3019-1)and shaft 16-4 (SAE J744 OCT83) for installation of LA10VSO18...U shaft
Order code **K01**

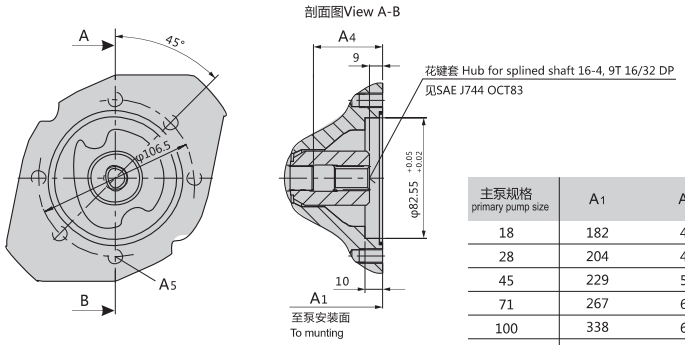

主泵规格 primary pump size	A1	A4	A5
18	182	42	M10;深 deep 14
28	204	47	M10;深 deep 14.5
45	229	53	M10;深 deep 14.5
71	267	61	M10;深 deep 17
100	338	65	M10;深 deep 17
140	350	77	M10;深 deep 17

法兰82-2（ISO 3019-1）和轴19-4（SAE J744 OCT83）用于安装S型和R型轴伸的LA10VSO18...订货型号 **K52**
Flange 82-2(ISO 3019-1)and shaft 19-4 (SAE J744 OCT83) for installation of LA10VSO18...S shaft & R shaft
Order code **K52**

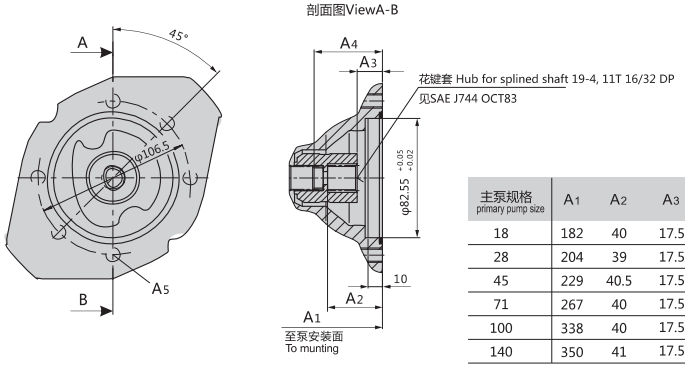

主泵规格 primary pump size	A1	A2	A3	A4	A5
18	182	40	17.5	43	M10;深 deep 16
28	204	39	17.5	47	M10;深 deep 16
45	229	40.5	17.5	53	M10;深 deep 16
71	267	40	17.5	61	M10;深 deep 20
100	338	40	17.5	65	M10;深 deep 20
140	350	41	17.5	77	M10;深 deep 20

NVICKS® 威克斯液压 VICKS HYDRAULIC

串 泵 Tandem (Double,Triple) Pump

LA10V通轴驱动尺寸 Through Drive Dimension

法兰101-2（ISO 3019-1SAE J744 OCT83）和轴22-4（SAE J744 OCT83）用于安装径向O型圈密封。订货型号 **K02**
Flange101-2(ISO 3019-1SAE J744 OCT83)and shaft 22-4 (SAE J744 OCT83) for installation of O ring
Order code **K02**

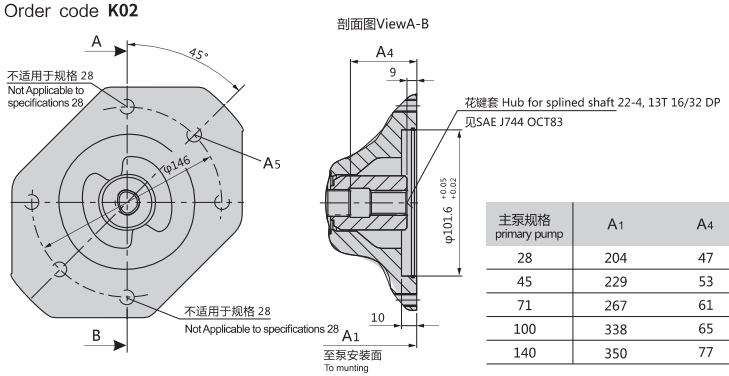

主泵规格 primary pump	A1	A4	A5
28	204	47	M12;深 deep 15
45	229	53	M12;深 deep 18
71	267	61	M12;深 deep 20
100	338	65	M12;深 deep 20
140	350	77	M12;深 deep 20

法兰101-2（ISO 3019-1）和轴22-4（SAE J744 OCT83）用于安装S型和R型轴伸的LA10VSO28...
订货型号 **K68**
Flange101-2(ISO 3019-1)and shaft 22-4 (SAE J744 OCT83) for installation of LA10VSO28...S shaft & R shaft
Order code **K68**

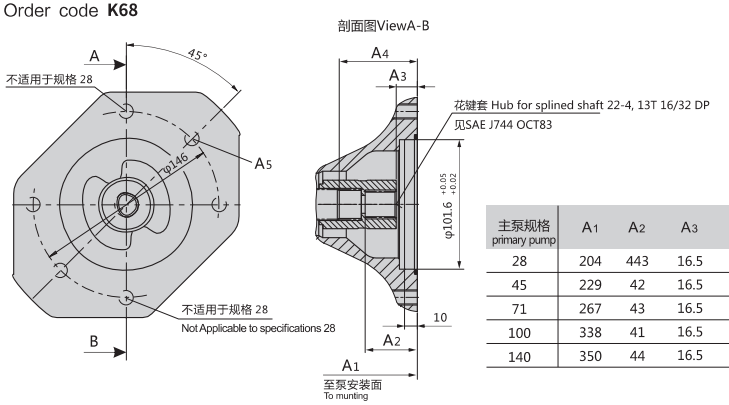

主泵规格 primary pump	A1	A2	A3	A4	A5
28	204	443	16.5	47	M12;深 deep 15
45	229	42	16.5	53	M12;深 deep 18
71	267	43	16.5	61	M12;深 deep 20
100	338	41	16.5	65	M12;深 deep 20
140	350	44	16.5	77	M12;深 deep 20

串 泵 Tandem (Double,Triple) Pump

LA10V通轴驱动尺寸 Through Drive Dimension

法兰101-2（ISO 3019-1）和轴25-4（SAE J744 OCT83）用于安装S型和R型轴伸的LA10VSO45...订货型号 **K04**
Flange101-2(ISO 3019-1)and shaft 25-4 (SAE J744 OCT83) for installation of LA10VSO45...S shaft & R shaft
Order code **K04**

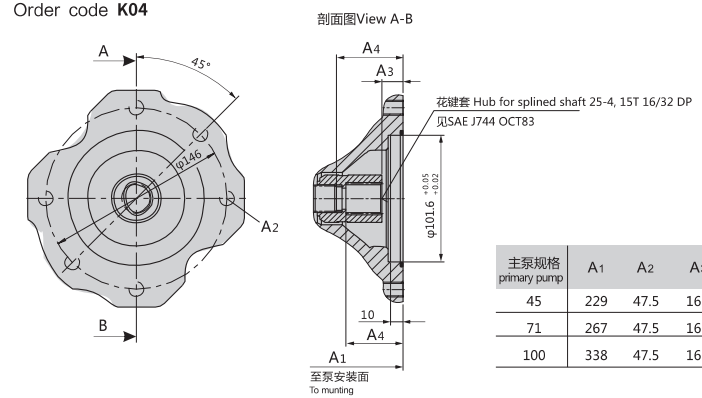

主泵规格 primary pump	A1	A2	A3	A4	A5
45	229	47.5	16.9	153	M12;深 deep 18
71	267	47.5	16.9	61	M12;深 deep 20
100	338	47.5	16.9	65	M12;深 deep 20

法兰127-2（ISO 3019-1）和轴2-4（SAE J744 OCT83）用于安装S型和R型轴伸的LA10VSO71...
订货型号 **K07**
Flange127-2(ISO 3019-1)and shaft 2-4 (SAE J744 OCT83) for installation of LA10VSO71...S shaft & R shaft
Order code **K07**

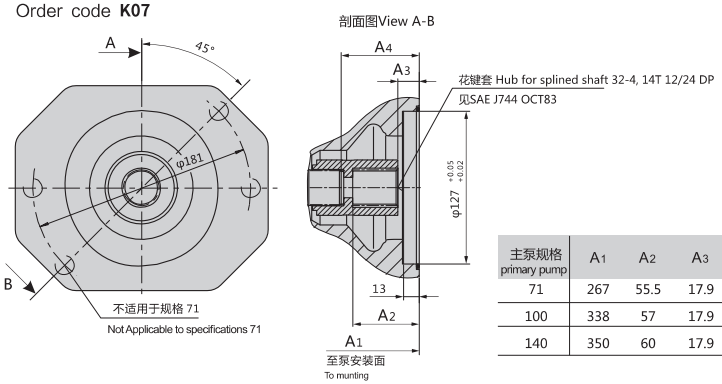

主泵规格 primary pump	A1	A2	A3	A4	A5
71	267	55.5	17.9	61	M16;深 deep 18
100	338	57	17.9	65	M16;深 deep 25
140	350	60	17.9	77	M16;深 deep 32

串 泵 Tandem (Double,Triple) Pump

LA10V通轴驱动尺寸 Through Drive Dimension

法兰127-2（ISO 3019-1）和轴38-4（SAE J744 OCT83）的泵，用于安装S型轴伸的LA10VSO100...订货型号 **K24**
Flange127-(ISO 3019-1)and shaft 38-4 (SAE J744 OCT83) for installation of LA10VSO100...S shaft
Order code **K24**

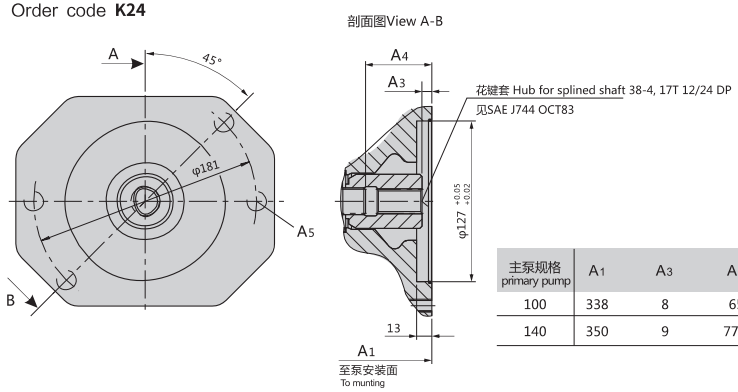

主泵规格 primary pump	A1	A3	A4	A5
100	338	8	65	M16;深 deep 20
140	350	9	77.3	M16;深 deep 32

法兰152-4（ISO 3019-1）和轴44-4（SAE J744 OCT83）用于安装S轴伸的LA10VSO140...订货型号 **K17**
Flange152-(ISO 3019-1)and shaft 44-4 (SAE J744 OCT83) for installation of LA10VSO140...S shaft
Order code **K17**

主泵规格 primary pump size 140

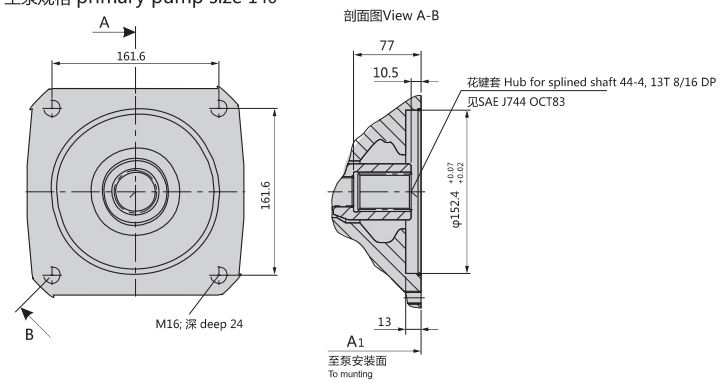

LA10VSO Series 32

轴向柱塞变量泵

Axial piston variable pump

特性

- 斜盘结构轴向柱塞变量泵，用于开式回路中的静液压传动
- 流量与传动速度和排量成比例
- 可通过调节旋转斜盘角度实现无级变量。
- 对摇架轴承进行流体静力卸载
- 用于泵出口内压力传感器的油口
- 低噪音等级
- 低压脉动
- 高效率
- 高度抗气蚀、吸气压力及壳体压力峰值突然下降
- 通用通轴驱动

Features

- Variable displacement pump with axial piston rotary group of swashplate design for hydrostatic drives in open circuit
- Flow is proportional to the drive speed and displace-ment.
- The flow can be infinitely varied by adjusting the swash-plate angle.
- Hydrostatically unloaded cradle bearing
- Port for measurement sensor on the high-pressure port
- Low noise level
- Low pressure pulsation
- High efficiency
- High resistance to cavitation, suction pressure drops and housing pressure peaks
- Universal through drive

订货型号/标准产品 Order model/standard product

LA10VS	O			/	32		–	V		B				
01	02	03	04		05	06		07	08	09	10	11	12	13

轴向柱塞单元 Axial piston unit

01	斜盘设计、变量、公称压力 280 bar、最大压力 350 bar Swashplate design, variable, nominal pressure 280 bar, maximum pressure 350 bar	LA10VS

工作类型 Operating mode

02	泵，开式回路 Pump, open circuit	O

规格 (NG) Size (NG)

		045	071	100	140
03	几何排量，(见第66页的数据表) Geometric displacement, see "Technical data" on page 66	045	071	100	140

控制设备 Control device

						045	071	100	140	
04	两点直动式控制 Two-point control, directly operated					●	●	●	●	DG
	压力控制器 Pressure controller	液压 hydraulic				●	●	●	●	DR
	带流量控制 with flow control	液压 hydraulic	X-T 开启 X-T open			●	●	●	●	DRF
			X-T 堵住 X-T plugged			●	●	●	●	DRS
	压力切断 pressure cut-off	液压 hydraulic	远程控制 remotely operated			●	●	●	●	DRG
		电动 electric	负控制 negative control		U = 12 V	●	●	●	●	ED71
					U = 24 V	●	●	●	●	ED72
		电动 electric	正控制 positive control		U = 12 V	●	●	●	●	ER71[1]
					U = 24 V	●	●	●	●	ER72[1]
	带压力切断的功率控制 Power control with pressure cut-off	液压 hydraulic	控制初始值 control begin	至 to	50 bar	●	●	●	●	LA5D
				自 from	51 至to 90 bar	●	●	●	●	LA6D
					91 至to 160 bar	●	●	●	●	LA7D
					160 至to 240 bar	●	●	●	●	LA8D
				高于above	240 bar	●	●	●	●	LA9D
	远程控制 remotely operated	液压 hydraulic	控制初始值 control begin	参见 LA.D see LA.D		●	●	●	●	LA.DG
	流量控制，X-T 堵住 flow control, X-T plugged	液压 hydraulic	控制初始值 control begin	参见 LA.D see LA.D		●	●	●	●	LA.DS
		可电覆盖(负控制) electrically overridable (negative control)	控制初始值 control begin	参见 LA.D see LA.D		●	●	●	●	LA.S

系列

05	系列 3，索引号 2 Series 3, index 2	32

旋转方向

06	从传动轴方向看 Viewed on drive shaft	顺时针 clockwise	R
		逆时针 counter-clockwise	L

密封件 Seal

07	FKM（氟橡胶）FKM (fluor-caoutchouc)	V

订货型号/标准产品 Order model/standard product

01	02	03	04	05	06	07	08	09	10	11	12	13
LA10VS	O			/	32	–	V		B			

传动轴 Drive shafts

08	符合 DIN 6885 标准的平键轴，对直接传动的适应性有限 Parallel keyed shaft ISO 3019-1 (SAE J744) limited suitability for through drive		●	●	●	●	●	P
	花键轴 Splined shaft	标准轴 standard shaft	●	●	●	●	●	S
	ANSI B92.1a	类似于轴 “S”，但适合更高的输入扭矩 similar to shaft “S” however for higher input torque	●	●	–	–	–	R

安装法兰 Mounting flange

09	ISO 3019-2; 4 孔 hole	B

1) 在项目计划过程中必须注意下列事项:
流向 ER 电磁铁的过高电流强度（12V 时 I > 1200 mA 或 24V 时 I > 600 mA）可能导致压力增大，从而导致泵或系统损坏，因此:
1) The following must be taken into account during project planning:
Excessive current levels (I > 1200 mA at 12 V or I > 600mA at 24 V) to the ER solenoid can result in undesired pressure increases which can lead to pump or system damage. Therefore:

- 使用 I_{max} 限流线圈。
- 在溢流的情况下，叠加阀板可用于保护该泵。
- Use I_{max} current limiter solenoids.
- A sandwich plate pressure reducing valve can be used to protect the pump in the event of overflow.

工作管路油口 Service line ports

			045	071	100	140	
10	顶部和底部的对侧 SAE 法兰，公制紧固螺纹，带通用通轴驱动 SAE flange ports at top, at bottom, on opposite side, UNF fastening thread with universal through drive	**不带** 脉动减震 **without** pulsation damping	●	●	●	●	22U
		带脉动减震，不适用于高速 **with** pulsation damping, not for high-speed	●	●	●	●	32U

通用通轴[1]（有关配件选项，参见第101页）**Through drives**[1] (for fitting options, see page 101)

					045	071	100	140	
11	法兰 Flange ISO 3019-2[2] 直径 Diameter	附件[5] Attachment[5]	花键轴套[3] Hub for splined shaft[3] 直径 Diameter						
	不带直接传动，带直接传动轴，不带轴耦合器，不带适配器法兰，带正确闭合的护盖 Prepared for through drive, with pressure-resistant plugged cover.				—	●	●	●	99
	不带通轴驱动[4] Without through drive[1][4]				●	●	●	●	00
	ISO 80, 2 孔 hole		3/4 in	11T 16/32DP	●	●	●	●	B2
	ISO 100, 2 孔 hole		7/8 in	13T 16/32DP	●	●	●	●	B3
	ISO 125, 4 孔 hole		1 in	15T 16/32DP	●	●	●	●	E1
	ISO 160, 4 孔 hole		1 1/4 in	14T 12/24DP	–	●	●	●	B8
	ISO 180, 4 孔 hole		1 1/2 in	17T 24/24DP	–	–	●	●	B9
			1 3/4 in	13T 8/16DP	–	–	–	●	B7
	法兰 Flange ISO 3019-2[2] 直径 Diameter		花键轴套[3] Hub for splined shaft[3] 直径 Diameter						
	82-2 (A)		5/8 in	9T 16/32DP	●	●	●	●	01
			3/4 in	11T 16/32DP	●	●	●	●	52
	101-2 (B)		7/8 in	13T 16/32DP	●	●	●	●	68
			1 in	15T 16/32DP	●	●	●	●	04
	127-4 (C)		1 in	15T 16/32DP	●	●	●	●	E2
			1 1/4 in	14T 12/24DP	–	●	●	●	15
	127-2 (C)		1 1/2 in	17T12/24DP	–	–	●	●	24
	152-4 (D)		1 1/2 in	17T 12/24DP	–	–	●	●	96
			1 3/4 in	13T 8/16DP	–	–	–	●	17

旋转总成 Rotary group version

12	标准旋转总成（针对 n = 1500/1800 转/分钟时噪音优化设计） 12 Standard rotary group (noise-optimized for n = 1500/1800 rpm)	●	●	●	●	E
	高速（仅用于油口接板 22U） High-speed (with port plate version 72U only)	●	●	●	●	S

电磁铁插头 Connector for solenoids

13	不带插头（不带电磁铁，只有液压控制，无代码）	Without connector (without solenoid, with hydraulic control only, without code)	
	HIRSCHMANN 插头 – 不带镇流器二极管	HIRSCHMANN connector – without suppressor diode	H

● = 可供货　○ = 根据需要供货　– = 不可供货　● = Available　○ = On request　– = Not available

1) 参阅技术数据表 95581
2) 2 孔:附件泵系列 31　4 孔：附件泵系列 32
3) 符合 ANSI B92.1a（花键轴符合 SAE J744）
4) 带通轴驱动轴，不带毂，不带中间法兰，在功能可靠的基础上用盖封闭
5) 从顶部带控制的通轴驱动看通孔安装面

1) See data sheet 95581 for a list of universal through drivekits.
2) 2-hole: Attachment pump series 31
4-hole: Attachment pump series 32
3) According to ANSI B92.1a (splined shafts according to SAE J744)
4) With through-drive shaft, without hub, without intermediate flange, closed on a functionally reliable basis with cover
5) Mounting through bores pattern viewed from through drive with control at top

液压油

变量泵 LA10VSO 专用于在使用符合 DIN 51524 的 HLP 矿物油下运行。
在开始项目规划之前，请参考以下技术数据表，以获取有关液压油应用说明和要求的信息。

- 90220：矿物油基液压油和相关碳氢化合物
- 90221：环保液压油
- 90222：耐火、不含水液压油（HFDR/HFDU）

Hydraulic fluids

The LA10VSO variable pump is designed for operation with HLP mineral oil according to DIN 51524. Application instructions and requirements for hydraulic fluids should be taken from the following data sheets before the start of project planning:

- 90220: Hydraulic fluids based on mineral oils and related hydrocarbons
- 90221: Environmentally acceptable hydraulic fluids
- 90222: Fire-resistant, water-free hydraulic fluids (HFDR/HFDU)

有关选择液压油的注意事项
选择液压油时，应确保工作温度范围内的工作粘度处于最佳范围（ν_{opt} 参见选择图）.

注意
部件任何部位的温度均不可高于 90 ℃。在确定轴承粘度时，应将表中指定的温差考虑在内。
如果由于极端的工作参数导致无法满足上述条件，请向力盛的负责人员咨询。

Notes on selection of hydraulic fluid
The hydraulic fluid should be selected such that the operating viscosity in the operating temperature range is within the optimum range (ν_{opt}: see selection diagram).

Note
At no point of the component may the temperature be higher than 194 °F (90 °C). The temperature difference specified in the table is to be taken into account when determining the viscosity in the bearing. If the above conditions cannot be maintained due to extreme operating parameters, please contact the responsible member of staff at LIXON.

粘度和液压油温度

	粘度	温度	备注
冷启动	ν_{max} ≤ 1000 mm²/s	θ_{St} ≥ -25 ℃[1)]	t ≤ 3 min，无负荷 (p ≤ 30 bar)
允许的温度差		ΔT ≤ 13 K	轴向柱塞单元和液压油之间
预热阶段	ν < 1000 至 400 mm²/s	θ = -25 ℃ 时	有关在低温下操作的详细信息，请参见技术数据表90300-03-B。
工作阶段	ν = 400 至 16 mm²/s		例如在VG 46 等级上，这正对应于+5 ℃ 至+70 ℃ 的温度范围（参见选择图）
		θ = -25 ℃ 至 +85 ℃	在油口 **L** 处测量注意轴密封件的允许温度范围（在轴承/轴密封件与油口 **L** 之间）ΔT = 约 5 K）
	ν_{opt} = 36 至 16 mm²/s		最佳工作粘度范围和效率
短期运行	ν_{min} ≥ 10 mm²/s		t < 3 min, p < 0.3 • p_{nom}

Cold start	ν_{max} ≤ 4600 SUS ν_{max} ≤ (1000 mm²/s)	θ_{St} ≥ -13 °F (-25 °C)[1)]	t ≤ 3 min, without load (p ≤ 435 psi (30 bar))
Permissible temperature difference		ΔT ≤ 23 °F (13 K)	between axial piston unit and hydraulic fluid
Warm-up phase	ν < 4600 to 1850 SUS ν < (1000 to 400 mm²/s)	θ = at -13 °F (-25 °C)	For detailed information on operation at low temperatures, see data sheet 90300-03-B.
	ν = 1850 to 80 SUS ν = (400 to 16 mm²/s)		This corresponds, for example on the VG 46, to a temperature range of 41 °F (+5 °C) to 158 °F (+70 °C) (see selection diagram)
		θ = -13 °F (-25 °C) to θ = 185 °F (+85 °C)	measured at port **L** Note the permissible temperature range of the shaft seal (ΔT = approx. 9 °F (5 K) between the bearing/shaft seal and port **L**)
	ν_{opt} = 170 to 80 SUS ν_{opt} = (36 to 16 mm²/s)		
	ν_{min} ≥ 60 SUS (10 mm²/s)		t < 3 min, p < 0.3 • p_{nom}

▼ **选择图 Selection diagram**

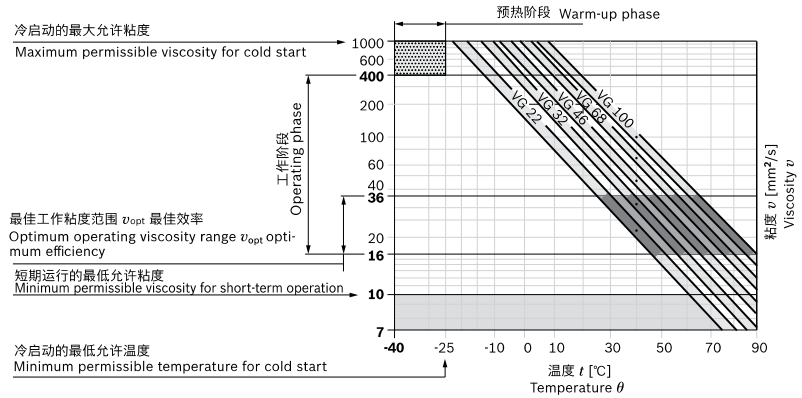

1) 当温度介于-40 ℃与-25 ℃ 之间时，需要采取特别措施。请与我们联系。

1) Special measures are necessary at temperatures between -40 °F (-40 °C) and -13 °F (-25 °C) . Please contact us.

有关在低温下操作的详细信息，请参见技术数据表90300-03-B。
For detailed information on operation at low temperatures, see data sheet 90300-03-B.

液压油的过滤
更精细的过滤可以提高液压油的清洁度，从而延长轴向柱塞单元的使用寿命。
根据 ISO 4406，清洁度至少应维持在20/18/15 级。
如果无法达到上述等级，请与我们联系。

Filtration of the hydraulic fluid
Finer filtration improves the cleanliness level of the hydraulic fluid, which increases the service life of the axial piston unit.
A cleanliness level of at least 20/18/15 is to be maintained according to ISO 4406.
Please contact us if the above classes cannot be observed.

工作压力范围 Working pressure range

工作管路油口 B 处的压力			定义
公称压力 p_{nom}		280 bar 绝对压力	公称压力相当于最大的设计压力。
最大压力 p_{max}		350 bar 绝对压力	最大压力与单次工作时间内的最大工作压力相对应。各次工作时间的总和不得超过总工作时间。
单次工作时间		2.5 ms	
总工作时间		300 小时	
最小压力（高压端）		10 bar[1] 绝对压力	防止损坏轴向柱塞单元所需的最高侧（**B**）的最小压力。
压力变化速率 $R_{A\,max}$		16000 bar/s	在整个压力范围内压力变化时的最大允许增压/减压速率。
吸油口 S（入口）压力			
最小压力 $p_{S\,min}$	标准	0.8 bar 绝对压力	防止损坏轴向柱塞单元所需的吸油口 **S**（入口）处的最小压力。最小压力取决于向柱塞单元的转速和排量。
	高速	1.0 bar 绝对压力	
最大压力 $p_{S\,max}$		10 bar[2] 绝对压力	
油口 L_1, L_2 处的壳体泄油压力			
最大压力 $p_{L\,max}$		2 bar 绝对压力	最多比油口 **S** 的入口压力高 0.5 bar，但不高于 $p_{L\,max}$。需要一条单独通向油箱的壳体泄油管路。

Pressure at working port B			Definition
Nominal pressure p_{nom}		280 bar	The nominal pressure corresponds to the maximum design pressure.
Maximum pressure p_{max}		350 bar	The maximum pressure corresponds to the maximum working pressure within a single operating period. The sum of single operating periods must not exceed the total operating period.
Single operating period		2.5 ms	
Total operating period		300 h	
Minimum pressure (high-pressure side)		10 bar[1]	Minimum pressure on the high-pressure side (**B**) which is required in order to prevent damage to the axial piston unit.
Rate of pressure change $R_{A\,max}$		16000 bar/s	Maximum permissible pressure build-up and reduction speed during a pressure change across the entire pressure range.
Pressure at suction port S (inlet)			
Minimum pressure $p_{S\,min}$	Standard	0.8 bar absolute	Minimum pressure at suction port **S** (inlet) which is required to prevent damage to the axial piston unit. The minimum pressure depends on the rotational speed and displacement of the axial piston unit.
	High-Speed	1.0 bar absolute	
Maximum pressure $p_{S\,max}$		10 bar[2]	
Case pressure at port L_1, L_2			
Maximum pressure $p_{L\,max}$		2 bar absolute	Maximum 0.5 bar higher than inlet pressure at port **S**, but not higher than $p_{L\,max}$. A drain line to the reservoir is required.
Pilot pressure port X with external high pressure			
Maximum pressure p_{max}	350 bar		When designing all control lines with external high pressure, the values for the rate of pressure change, maximum single operating period and total operating period applicable to port **B** must not be exceeded.

▼ **压力变化速率 $R_{A\,max}$**
Rate of pressure change $R_{A\,max}$

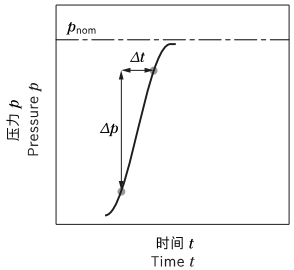

▼ **压力定义 Pressure definition**

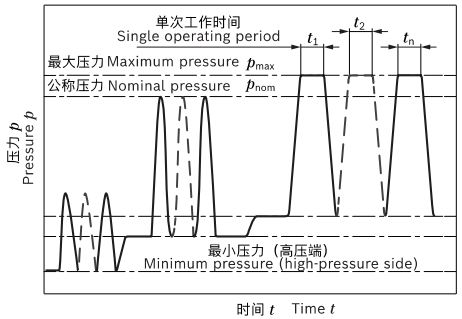

总工作时间 = $t_1 + t_2 + ... + t_n$

注意
工作压力范围适用于使用基于矿物油的液压油时。有关其他液压油的数值，请联系我们。

Total operating period = $t_1 + t_2 + ... + t_n$

Notice
Working pressure range applies when using hydraulic fluids based on mineral oils. Please contact us for values for other hydraulic fluids.

1) 更低压力与时间有关，请联系我们
2) 其他数值根据要求提供

1) Lower pressure is time-dependent, please contact us
2) Other values on request

LA10VSO 轴向柱塞变量泵
Axial piston variable pump

技术数据 Technical data

标准旋转总成，版本 E

规格		NG		45	71	100	140
几何排量（每转）		$V_{g\,max}$	cm^3	45	71	100	140
最大转速[1]	$V_{g\,max}$ 时	n_{nom}	转/分钟	1800[2]	1800[2]	1800[2]	1800[3]
流量	n_{nom} 和 $V_{g\,max}$ 时	q_v	l/min	81	128	180	252
	n_E = 1500 转/分钟时	q_{vE}	l/min	67.5	106.7	150	210
功率	n_{nom}, $V_{g\,max}$ 和 Δp = 280 bar 时	P	kW	38	59.7	84	118
	n_E = 1500 转/分钟时	P_E	kW	31	50	70	98
扭矩	$V_{g\,max}$ 和 Δp = 280 bar 时	T	Nm	200	317	446	624
	$V_{g\,max}$ 和 Δp = 100 bar 时	T	Nm	72	113	159	223
传动轴旋转刚度	P	c	Nm/rad	34587	80627	132335	188406
	S	c	Nm/rad	29497	71884	121142	169537
	R	c	Nm/rad	41025	76545	–	–
旋转总成转动惯量		J_{TW}	kgm^2	0.0035	0.0087	0.0185	0.0276
最大角加速度[4]		α	rad/s^2	4000	2900	2400	2000
壳体体积		V	L	1.0	1.6	2.2	3.0
质量（近似值）		m	kg	30	47	69	73

Rotary group – version "E"

Size		NG		45	71	100	140
Geometric displacement, per revolution		$V_{g\,max}$	cm^3	45	71	100	140
Maximum rotational speed[1]	at $V_{g\,max}$	n_{nom}	rpm	1800[2]	1800[2]	1800[2]	1800[3]
Flow	at n_{nom} and $V_{g\,max}$	q_v	l/min	81	128	180	252
	at n_E = 1500 rpm	q_{vE}	l/min	67.5	106.7	150	210
Power	at n_{nom}, $V_{g\,max}$ and Δp = 280 bar	P	kW	38	59.7	84	118
	at n_E = 1500 rpm	P_E	kW	31	50	70	98
Torque	at $V_{g\,max}$ and Δp = 280 bar	M	Nm	200	317	446	624
	at $V_{g\,max}$ and Δp = 100 bar	M	Nm	72	113	159	223
Rotary stiffness Drive shaft	P	c	Nm/rad	34587	80627	132335	188406
	S	c	Nm/rad	29497	71884	121142	169537
	R	c	Nm/rad	41025	76545	–	–
Moment of inertia of the rotary group		J_{TW}	kgm^2	0.0035	0.0087	0.0185	0.0276
Maximum angular acceleration[4]		α	rad/s^2	4000	2900	2400	2000
Case volume		V	L	1.0	1.6	2.2	3.0
Weight (12N00 without through drive) approx.		m	kg	–	–	–	70.5
Weight (12Kxx) approx.		m	kg	–	–	–	79.5
Weight (22Uxx/32Uxx) approx.		m	kg	32.6	51.8	76	90.2

操作特性的计算	Determination of the characteristics		
流量 Flow	$q_v = \frac{V_g \times n \times \eta_v}{1000}$		[l/min]
扭矩 Torque	$T = \frac{V_g \times \Delta p}{20 \times \pi \times \eta_{hm}}$		[Nm]
功率 Power	$P = \frac{2\pi \times T \times n}{60000}$	$= \frac{q_v \times \Delta p}{600 \times \eta_t}$	[kW]

LA10VSO 轴向柱塞变量泵
Axial piston variable pump

关键词

V_g	每转排量 [cm^3]
Δp	压差 [bar]
n	转速 [转/分钟]
η_v	容积效率
η_{hm}	机械- 液压效率
η_t	总效率 ($\eta_t = \eta_v \times \eta_{hm}$)

Key

V_g	Displacement per revolution [cm^3]
Δp	Differential pressure [bar]
n	Rotational speed [rpm]
η_v	Volumetric efficiency
η_{hm}	Hydraulic-mechanical efficiency
η_t	Total efficiency ($\eta_t = \eta_v \times \eta_{hm}$)

注意

- 理论值，不包括系数和公差；近似值
- 超过最大允许值或低于最小允许值可能导致功能丢失、使用寿命缩短或使轴向柱塞单元完全损坏。Lixon 建议通过实验或计算/模拟等方式进行负荷测试，并将其与允许值进行比较。

Notice

- Theoretical values, without efficiency and tolerances; values rounded
- Operation above the maximum values or below the minimum values may result in a loss of function, a reduced service life or in the destruction of the axial piston unit. Lixon recommend testing the load by means of experiment or calculation/simulation and comparison with the permissible values.

1) 该值适用于：
–最佳粘度范围从vopt = 36 至 16 mm^2/s
–矿物油基液压油
2) 相关值在吸油口 S 处的绝对压力 pabs = 0.8 bar 时适用
3) 相关值在吸油口 S 处的绝对压力 pabs = 1.0 bar 时适用
4) 该数据适用于所需的最小速度与最大允许速度之间的值。对于外部激励有效（例如柴油发动机 2 至 8 倍旋转频率，万向节轴 2 倍旋转频率）。极限值仅适用于单级泵。必须考虑连接件的负载能力。

1) The values are applicable:
– for the optimum viscosity range from ν_{opt} = 36 to 16 mm^2/s
– with hydraulic fluid on the basis of mineral oils
2) The values are applicable at an absolute pressure of p_{abs} = 0.8 bar at suction port **S**
3) The values apply at absolute pressure p_{abs} = 1.0 bar at suction port **S**
4) The data are valid for values between the minimum required and maximum permissible rotational speed. Valid for external excitation (e.g. diesel engine 2 to 8 times rotary frequency; cardan shaft twice the rotary frequency). The limit value is only valid for a single pump. The load capacity of the connection parts must be considered.

技术数据 Technical data

高速旋转总成, 版本S

规格		NG		45	71	100	140
几何排量（每转）		$V_{g\,max}$	cm³	45	71	100	140
最大转速[1]	$V_{g\,max}$ 时	n_{nom}	转/分钟	3000[2]	2550[2]	2300[2]	2200[2]
流量	n_{nom} 和 $V_{g\,max}$ 时	q_v	l/min	135	181	230	308
	n_E = 1500 转/分钟时	q_{vE}	l/min	67.5	106.7	150	210
功率	n_{nom}, $V_{g\,max}$ 和 Δp = 280 bar 时	P	kW	62.8	85	107	144
	n_E = 1500 转/分钟时	P_E	kW	31	50	70	98
扭矩	$V_{g\,max}$ 和 Δp = 280 bar 时	T	Nm	200	317	446	624
	$V_{g\,max}$ 和 Δp = 100 bar 时	T	Nm	72	113	159	223
转动刚度	传动轴 P	c	Nm/rad	34587	80627	132335	188406
	传动轴 S	c	Nm/rad	29497	71884	121142	169537
	传动轴 R	c	Nm/rad	41025	76545	–	–
旋转总成转动惯量		J_{TW}	kgm²	0.0035	0.0087	0.0185	0.0276
最大角加速度[3]		α	rad/s²	4000	2900	2400	2400
壳体体积		V	L	1.0	1.6	2.2	3.0
质量（近似值）		m	kg	30	47	69	73

High-speed rotary group – version "S"

Size		NG		45	71	100	140
Geometric displacement, per revolution		$V_{g\,max}$	cm³	45	71	100	140
Maximum rotational speed[1]	at $V_{g\,max}$	n_{nom}	rpm	3000[2]	2550[2]	2300[2]	2200[2]
Flow	at n_{nom} and $V_{g\,max}$	q_v	l/min	135	181	230	308
	at n_E = 1500 rpm	q_{vE}	l/min	67.5	106.7	150	210
Power	at n_{nom}, $V_{g\,max}$ and Δp = 280 bar	P	kW	62.8	85	107	144
	at n_E = 1500 rpm	P_E	kW	31	50	70	98
Torque	at $V_{g\,max}$ and Δp = 280 bar	M	Nm	200	317	446	624
	at $V_{g\,max}$ and Δp = 100 bar	M	Nm	72	113	159	223
Rotary stiffness	Drive shaft P	c	Nm/rad	34587	80627	132335	188406
	Drive shaft S	c	Nm/rad	29497	71884	121142	169537
	Drive shaft R	c	Nm/rad	41025	76545	–	–
Moment of inertia of the rotary group		J_{TW}	kgm²	0.0035	0.0087	0.0185	0.0276
Maximum angular acceleration[3]		α	rad/s²	4000	2900	2400	2000
Case volume		V	L	1.0	1.6	2.2	3.0
Weight (approx.)		m	kg	30	47	69	73

操作特性的计算 Determination of the characteristics			
流量 Flow	$q_v = \frac{V_g \times n \times \eta_v}{1000}$		[l/min]
扭矩 Torque	$T = \frac{V_g \times \Delta p}{20 \times \pi \times \eta_{hm}}$		[Nm]
功率 Power	$P = \frac{2\pi \times T \times n}{60000} = \frac{q_v \times \Delta p}{600 \times \eta_t}$		[kW]

NVICKS® 威克斯液压 VICKS HYDRAULIC

LA10VSO 轴向柱塞变量泵 Axial piston variable pump

关键词

V_g	每转排量 [cm³]
Δp	压差 [bar]
n	转速 [转/分钟]
η_v	容积效率
η_{hm}	机械- 液压效率
η_t	总效率 ($\eta_t = \eta_v \times \eta_{hm}$)

Key

V_g	Displacement per revolution [cm³]
Δp	Differential pressure [bar]
n	Rotational speed [rpm]
η_v	Volumetric efficiency
η_{hm}	Hydraulic-mechanical efficiency
η_t	Total efficiency ($\eta_t = \eta_v \times \eta_{hm}$)

Technical data, HF hydraulic fluids

Maximum rotational speed

Hydraulic fluid[4] Version "C"	Size		NG	140 [rpm]
HFA	at nominal pressure p_N	140 bar	n_{nom}	1350
	at maximum pressure p_{max}	160 bar		
HFB	at nominal pressure p_N	140 bar	n_{nom}	1450
	at maximum pressure p_{max}	160 bar		
HFC	at nominal pressure p_N	175 bar	n_{nom}	1450
	at maximum pressure p_{max}	210 bar		
Technical data, HFD hydraulic fluids				
HFDR, HFDU polyalkylene glycol	at nominal pressure p_N	280 bar	n_{nom}	1450
HFDU polyol ester	at nominal pressure p_N	280 bar		1800

注意

- 理论值，不包括系数和公差；近似值
- 超过最大允许值或低于最小允许值可能导致功能丢失、使用寿命缩短或使轴向柱塞单元完全损坏。Lixon 建议通过实验或计算/模拟等方式进行负荷测试，并将其与允许值进行比较。

Notice

- Theoretical values, without efficiency and tolerances; values rounded
- Operation above the maximum values or below the minimum values may result in a loss of function, a reduced service life or in the destruction of the axial piston unit. Lixon recommend testing the load by means of experiment or calculation/simulation and comparison with the permissible values.

1) 该值适用于:
–最佳粘度范围从vopt = 36 至 16 mm²/s
–矿物油基液压油
2) 相关值在吸油口 S 处的绝对压力 pabs = 1.0 bar 时适用
3) 该数据适用于所需的最小速度与最大允许速度之间的值。对于外部激励有效（例如柴油发动机 2 至 8 倍旋转频率，万向节轴 2 倍旋转频率）。极限值仅适用于单级泵。必须考虑连接件的负载能力。

1) The values are applicable:
– for the optimum viscosity range from ν_{opt} = 36 to 16 mm²/s
– with hydraulic fluid on the basis of mineral oils
2) The values apply at absolute pressure p_{abs} = 1.0 bar at suction port **S**
3) The data are valid for values between the minimum required and maximum permissible rotational speed. Valid for external excitation (e.g. diesel engine 2 to 8 times rotary frequency; cardan shaft twice the rotary frequency). The limit value is only valid for a single pump. The load capacity of the connection parts must be considered.
4) For HF hydraulic fluids, see additional technical data in data sheet 90225).

LA10VSO 轴向柱塞变量泵
Axial piston variable pump

传动轴的允许径向负载和轴向负载 Permissible radial and axial loading of the drive shaft

规格 Size		NG		45	71	100	140
a/2 处的最大径向力 Maximum radial force at a/2	$F_{q\,max}$	N	1500	1900	2300	2800
最大轴向力 Maximum axial force	$\pm F_{ax\,max}$	N	1500	2400	4000	4800

注意
有关径向负载的传动装置（小齿轮、三角皮带传动装置），请与我们联系!

Notice
The values given are maximum values and do not apply to continuous operation. All loads of the drive shaft reduce the bearing service life!
For drives with radial loading (pinion, V-belt), please contact us.

允许的输入扭矩和通轴驱动扭矩 Permissible inlet and through-drive torques

规格 Size				45	71	100	140
扭矩 $V_{g\,max}$ 且 Δp = 280 bar[1] 时 Torque at $V_{g\,max}$ and Δp = 280 bar[1]		T_{max}	Nm	200	317	446	624
驱动轴的最大输入扭矩[2] Max. input torque on drive shaft[2]	P	$T_{E\,max}$	Nm	200	439	857	1206
		Ø	mm	25	32	40	45
	S	$T_{E\,max}$	Nm	319	626	1104	1620
		Ø	in	1	1 1/4	1 1/2	1 3/4
	R	$T_{E\,max}$	Nm	400	644	–	–
		Ø	in	1	1 1/4	–	–
最大通轴驱动扭矩 Maximum through-drive torque	P	$T_{D\,max}$	Nm	200	439	778	1206
	S	$T_{D\,max}$	Nm	319	492	778	1266
	R	$T_{D\,max}$	Nm	365	548	–	–

▼ **扭矩分布 Distribution of torques**

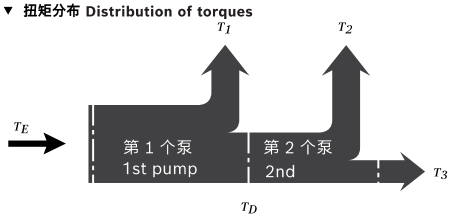

第 1 个泵的扭矩 Torque at 1st pump	T_1		
第 2 个泵的扭矩 Torque at 2nd pump	T_2		
第 3 个泵的扭矩 Torque at 3rd pump	T_3		
输入扭矩 Input torque	T_E	=	$T_1 + T_2 + T_3$
	T_E	<	$T_{E\,max}$
通轴驱动扭矩 Through-drive torque	T_D	=	$T_2 + T_3$
	T_D	<	$T_{D\,max}$

1) 不考虑效率
2) 用于没有径向力的驱动轴

1) Efficiency not considered
2) For drive shafts with no radial force

LA10VSO 轴向柱塞变量泵
Axial piston variable pump

驱动功率和流量 Drive power and flow

规格 45 Size 45

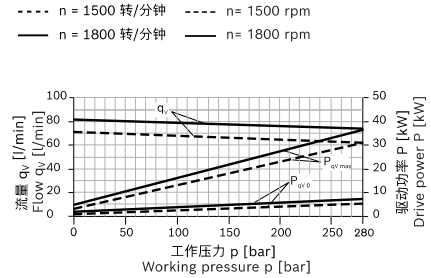

规格 100 Size 100

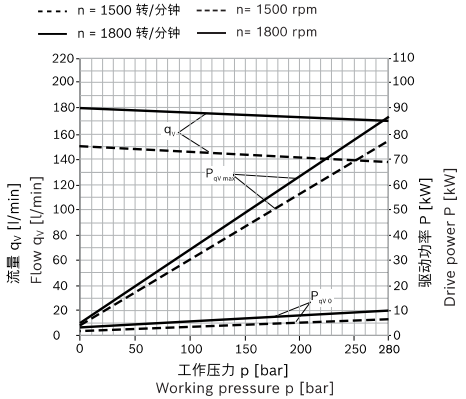

规格 71 Size 71

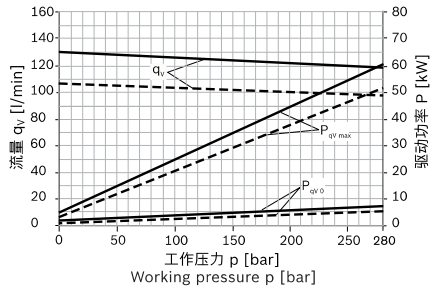

规格 140 Size 140

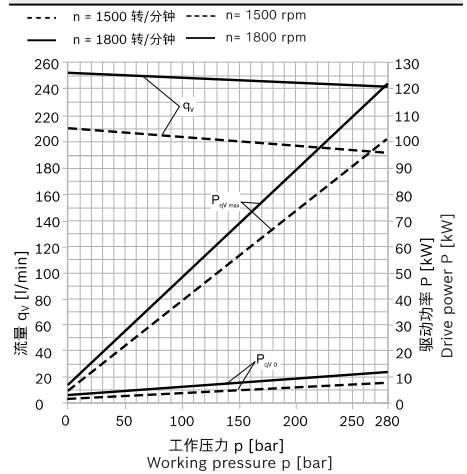

注意
▶ 特性曲线是通过使用 ISO VG 46 DIN 51519 液压油和 θ = 50 ℃ 时测得的。

Notice
▶ Characteristic curves measured using ISO VG 46 DIN 51519 hydraulic fluid and θ=50 ℃

DG – 两点直动式控制　DG – Two-point control, directly operated

通过将外部控制压力连接到油口 **X**，可以将变量泵的摆动角度设置为最小。
这样就可以直接给行程柱塞供油，同时必须确保最小压力 p_{St} ≥ 50 bar。
变量泵只可在 $V_{g\,min}$ 和 $V_{g\,max}$ 之间切换。
请注意，油口 **X** 所需的控制压力直接取决于油口 **B** 的实际工作压力p_B。（参见控制压力特性曲线）。
最大允许控制压力为280 bar。

- X 的控制压力 p_{ST} = 0 bar ≙ $V_{g\,max}$
- X的控制压力 p_{ST} ≥ 50 bar ≙ $V_{g\,min}$

The variable pump can be set to a minimum swivel angle by connecting an external switching pressure to port **X.**
This will supply control fluid directly to the stroking piston; a minimum pressure of p_{St} ≥ 50 bar is required.
The variable pump can only be switched between $V_{g\,min}$ and $V_{g\,max}$.
Please note that the required switching pressure at port **X** is directly dependent on the actual operating pressure p_B at port **B**. (see switching pressure characteristic curve).
The maximum permissible switching pressure is 280 bar.

- Switching pressure p_{ST} in X= 0 bar ≙ $V_{g\,max}$
- Switching pressure p_{ST} in X≥ 50 bar ≙ $V_{g\,min}$

▼ **控制压力特性曲线 Switching pressure characteristic curve**

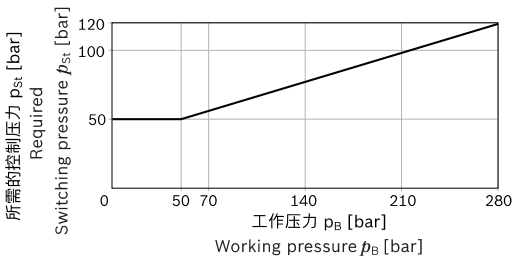

▼ **示意图 DG　Circuit diagram DG**

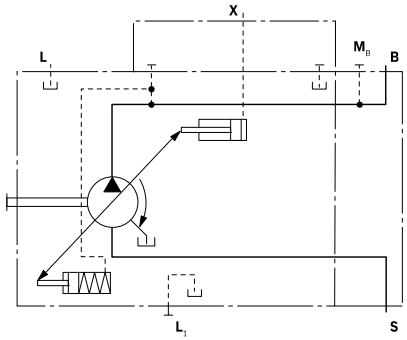

DR – 压力控制器　DR – Pressure control

压力控制器将泵出口的最大压力限制在变量泵的控制范围内。变量泵仅提供执行器所需的液压油量。如果工作压力超过压力阀处设置的压力设定值，则泵将调节至更小的排量以减少控制偏差。

- 卸压状态的基本位置：$V_{g\,max}$。
- 压力控制设置范围为[1] 20 至 280 bar。标准设置为 280 bar。

The pressure control limits the maximum pressure at the pump outlet within the control range of the variable pump. The variable pump only supplies as much hydraulic fluid as is required by the consumers. If the operating pressure exceeds the pressure setting at the pressure valve, the pump will regulate to a smaller displacement to reduce the control differential.

- Basic position in depressurized state: $V_{g\,max}$.
- Setting range[1] for pressure control 290 to 4100 psi (20 to 280 bar).
  Standard is 4100 psi (280 bar).

▼ **特性曲线 DR　Characteristic DR**

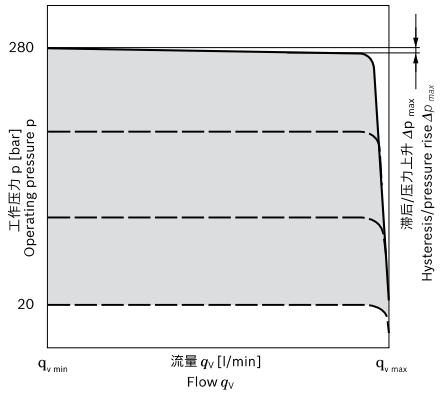

n_1 = 1500 转/分钟且 t_{fluid} = 50 °C 时，特性曲线有效。
Characteristic curve valid at n_1 = 1800 rpm and t_{fluid} = 122 °F (50 °C).

▼ **示意图 DR　Circuit diagram DR**

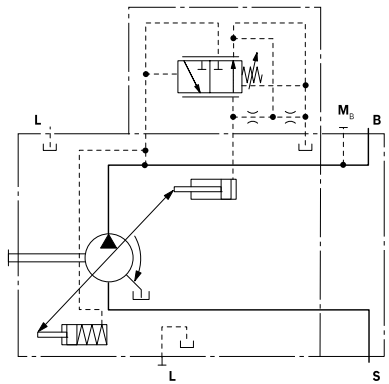

控制器数据

NG		45	71	100	140
最大压力上升	Δp [bar]	6	8	10	12
滞后和重复精度	Δp [bar]	最大 3			
先导流体消耗	l/min	最大约为 3			

在 q_{Vmax} 时的流量损失请参见第 71 页。

Controller data

NG		45	71	100	140
Pressure rise, maximum	Δp [psi] Δp [(bar)]	90 (6)	115 (8)	145 (10)	175 (12)
Hysteresis and repeatability	Δp [psi (bar)]	maximum 45 (3)			
Pilot fluid consumption	[gpm (l/min)]	maximum approx. 0.8 (3)			

Flow losses at q_{Vmax} see page 71.

1) 为了防止损坏泵和系统，不得超过允许的设置范围。阀处的可能设置范围更大。

1) In order to prevent damage to the pump and the system, the permissible setting range must not be exceeded. The range of possible settings at the valve is higher.

DRG – 远程压力控制

对于远程压力控制，可以使用一个单独布置的溢流阀来设置目标压力。DR 压力控制，请参见第73页。
为了实现远程压力控制，溢流阀可以通过外接管路连接至油口 **X**，但该溢流阀不包含在 DRG 远程压力控制装置的供货范围之内。控制阀的标准压差设置为20 bar。油口 **X** 处的先导流体量约为 1.5 l/min。如果需要其他设置（范围在 10 到 22 bar 之间），请以明文形式注明。
作为独立的溢流阀，我们推荐：

- 直接控制式、液压或比例电动且适用于上述先导流体量的溢流阀。

管路最长不得超过 2 m。

- 卸压状态的基本位置:$V_{g\,max}$。
- 压力控制设置范围为[1] 20 至 280 bar。

▼ **特性曲线 DRG Characteristic curve DRG**

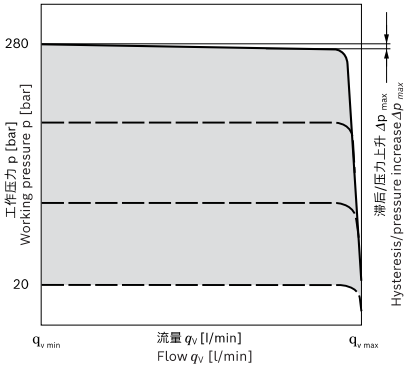

n_1 = 1500 转/分钟且 t_{fluid} = 50 °C 时，特性曲线有效。
Characteristic curve valid for n_1 = 1500 rpm and t_{fluid} = 50 °C.

1 The separate pressure relief valve and the line are not included in the scope of delivery.
2 Remote controlled pressure cut-off (**G**)
3 Pressure controller (**DR**)

控制器数据

NG		45	71	100	140
最大压力上升	Δp [bar]	6	8	10	12
滞后和重复精度	Δp [bar]	最大 3			
先导流体消耗	l/min	最大约为 4.5			

DRG – Pressure controller, remotely controlled

For the remote-controlled pressure controller, the pressure limitation is performed using a separately arranged pressure relief valve. Therefore, any pressure control value under the pressure set on the pressure controller can be regulated. Pressure controller DR see page 73.
A pressure relief valve is externally piped up to port **X** for remote control. This relief valve is not included in the scope of delivery of the DRG control.
A differential pressure of 20 bar Δ*p* (standard setting) results in a pilot oil flow of approx. 1.5 l/min at port **X**.
If another setting is required (range from 10-22 bar) please state in plain text.
As a separate pressure relief valve (**1**) we recommend:

- A direct operated, hydraulic or electric proportional one, suitable for the quantity of pilot fluid mentioned above. The maximum line length should not exceed 2 m.
- Basic position in depressurized state: $V_{g\,max}$.
- Setting range[1] for pressure control 50 to 280 bar (**3**). Standard is 280 bar.
- Setting range for differential pressure 10 – 22 bar (**2**). Standard is 20 bar.

Unloading port **X** to the reservoir results in a zero stroke pressure (standby) which is approx. 1 to 2 bar higher than the defined differential pressure Δ*p*, however system influences are not taken into account.

▼ **示意图 DRG**
Circuit diagram DRG

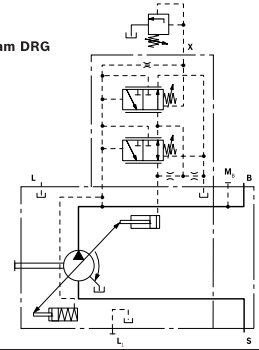

Controller data

NG		45	71	100	140
Pressure increase, maximum	Δ*p* [bar]	6	8	10	12
Hysteresis and Repeat accuracy	Δ*p* [bar]	maximum 3			
Pilot fluid consumption	l/min	maximum approx. 4.5			

1) 为了防止损坏泵和系统，不得超过允许的设置范围。 阀处的可能设置范围更大。
1) In order to prevent damage to the pump and the system, the permissible setting range must not be exceeded. The range of possible settings at the valve is higher.
2) Zero stroke from pressure setting Δ*p* on controller (**2**)
3) Only with port plates 22 and 32

DRF/DRS – 压力和流量控制

除了压力控制功能之外（参见第 73 页），还使用可变节流孔（例如方向阀）来调节节流孔上游和下游压差。这用于控制泵流量。无论压力等级如何变化，泵的流量将等于执行机构实际所需的流量。压力控制功能优先于流量控制功能。
注意
DRS 控制回路在 **X** 和油箱之间并无链接。所以必须能够在阀系统中卸载 LS 先导管路。
由于具有冲洗功能，因此还须确保阀系统有足够的能力卸载 **X** 管路。

- 卸压状态的基本位置：$V_{g\,max}$。
- 压力控制设置范围为[1] 20 至 280 bar，标准设置为 280 bar。

▼ **特性曲线 DRF/DRS Characteristic curve DRF/DRS**

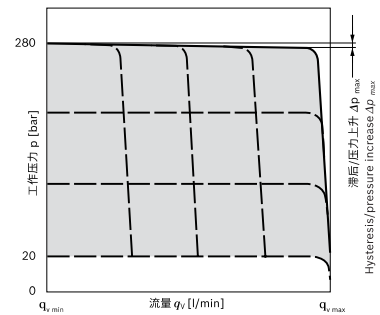

▼ **变速条件下的特性曲线**
Characteristic curve at variable rotational speed

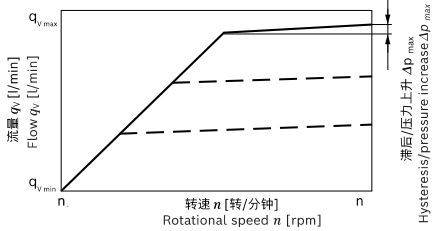

n_1 = 1500 转/分钟且 t_{fluid} = 50 °C 时，特性曲线有效。
Characteristic curves valid at n_1 = 1500 rpm and t_{fluid} = 50°C.

DRF/DRS – Pressure and flow controller

In addition to the pressure controller function (see page 73), an adjustable orifice (e.g. directional valve) is used to adjust the differential pressure upstream and downstream of the orifice. This is used to control the pump flow. The pump flow is equal to the actual hydraulic fluid quantity required by the consumer. With all controller combinations, the V_g reduction has priority.

- Basic position in depressurized state: $V_{g\,max}$.
- Setting range[1] to 280 bar
  Standard is 280 bar.

Notice

- The DRS version has no unloading between **X** and the reservoir. The LS must thus be unloaded in the system. Because of the flushing function of the flow controller in the DRS control valve, sufficient unloading of the **X** line must also be ensured.

▼ **示意图 DRF Circuit diagram DRF**

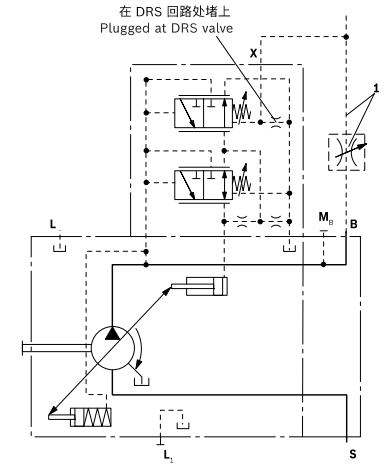

1 测量孔板（控制块）不包含在供货范围内。
1 Metering orifice is not included in the scope of delivery.

1 The metering orifice (control block) and the line are not included in the scope of delivery.
2 Flow controller (**FR**).
3 Pressure controller (**DR**)

1) 为了防止损坏泵和系统，不得超过允许的设置范围。 阀处的可能设置范围更大。
1) In order to prevent damage to the pump and the system, the permissible setting range must not be exceeded. The range of possible settings at the valve is higher.
2) Zero stroke from pressure setting Δ*p* on controller (**2**)
3) Only with port plates 22 and 32

LA10VSO 轴向柱塞变量泵
Axial piston variable pump

压差 Δp

控制阀的标准压差设置为 14 bar。油口 **X** 处的先导流体量约为 1.5 l/min。如果需要其他设置（范围在 10 到 22 bar 之间），请以明文形式注明。

释放至油箱油口 **X** 上的负载引起零行程（“备用”）压力，这比规定压差 Δp 高约 1 至 2 bar。系统影响未被考虑在内。

控制器数据

DR 压力控制数据，请参见第 73 页。

最大流量偏差按照驱动转速为 n = 1500 转/分钟进行测量。

NG		45	71	100	140
最大压力上升	Δp [bar]	6	8	10	12
滞后和重复精度	Δp [bar]	最大 3			
先导流体消耗	l/min	最大约为 4.5			
流量偏差	$\Delta q_{V\,max}$ [l/min]	1.8	2.8	4.0	6.0

Differential pressure Δp

- Standard setting: 14 bar
  If another setting is required, please state in the plain text.
- Setting range: 14 bar to 22 bar

Unloading port **X** to the reservoir results in a zero stroke pressure (standby) which is approx. 1 to 2 bar higher than the defined differential pressure Δp, however system influences are not taken into account.

Controller data

DR pressure controller data see page 73

Maximum flow deviation measured at drive speed n = 1500 rpm.

NG		45	71	100	140
Pressure increase, maximum	Δp [bar]	6	8	10	12
Hysteresis and Repeat accuracy	Δp [bar]	maximum 3			
Pilot fluid consumption	l/min	maximum approx. 4.5			
Flow deviation	$\Delta q_{V\,max}$ [l/min]	1.8	2.8	4.0	6.0

LA10VSO 轴向柱塞变量泵
Axial piston variable pump

LA...– 压力、流量和功率控制　LA... – Pressure, flow and power controller

采用 DR(G) 配备的压力控制，参见第73、74 页。
采用 DR(G) 配备的压力控制，参见第 75 页。
为了在工作压力不断变化的情况下保持恒定的传动扭矩，需要改变摆动角及相应的轴向柱塞泵输出流量，以便流出的流量和压力保持不变。流量控制可能低于功率控制曲线。订购时，请用明文说明工厂交货时要设置的功率特性，例如在 1500 转/分钟时 20 kW。

控制器数据

有关 DR 压力控制器的数据，参见第 73 页。
有关FR 流量控制器的数据，参见第 75 页。
先导流体消耗最大约 5.5 l/min。

Pressure controller equipped as DR(G), see page 73、74 .
Equipment of the flow controller like DRS, see page 75.
In order to achieve a constant drive torque with varying working pressures, the swivel angle and with it the output flow from the axial piston pump is varied so that the product of flow and pressure remains constant. Flow control is possible below the power control curve. When ordering please state the power characteristics to be set at the factory in plain text, e.g. 20 kW at 1500 rpm.

Controller data

For technical data of pressure controller DR see page 73.
For technical data of flow controller FR see page 75 .
Pilot fluid consumption max. approx. 5.5 l/min.

控制初始值 Beginning of control	相应规格的扭矩T [Nm] Torque M [Nm] for size 45	71	100	140	订货代码 Type code
可达up to 50 bar	至 to 42.0	至 to 67.0	至 to 94.0	至 to 132.0	**LA5**
51 至 to 90 bar	42.1 - 76.0	67.1 - 121.0	94.1 - 169.0	132.1 - 237.0	**LA6**
91 至 to 160 bar	76.1 - 134.0	121.1 - 213.0	169.1 - 299.0	237.1 - 418.0	**LA7**
161 至 to 240 bar	134.1 - 202.0	213.1 - 319.0	299.1 - 449.0	418.1 - 629.0	**LA8**
超过 over 240 bar	超过 over 202.1	超过 over 319.1	超过 over 449.1	超过 over 629.1	**LA9**

以功率表示的扭矩值转换[kW]　Conversion of the torque values in power [kW]

$$P = \frac{T}{6.4}\ [kW]$$ (1500 转/分钟) (At 1500 rpm)

或 or

$$P = \frac{2\pi \times T \times n}{60000}\ [kW]$$ (有关转速，参见第 66、68 页的表格) (For rotational speeds see table on page 66、68)

▼ **特性曲线 LA.DS　Characteristic curve LA.DS**

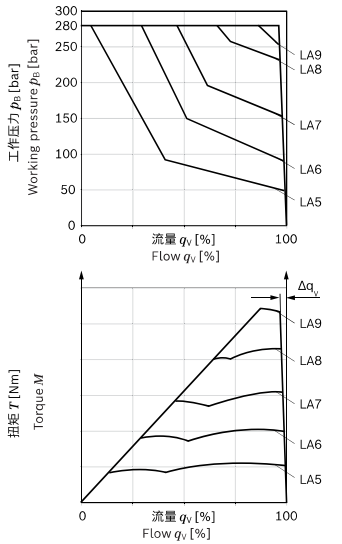

▼ **示意图 LA.DS　Circuit diagram LA.DS**

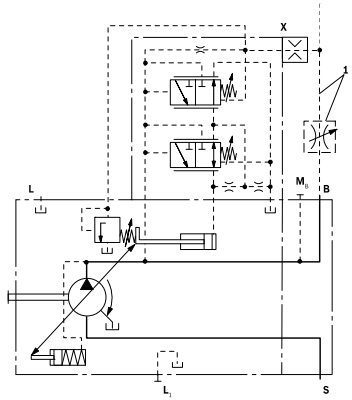

1 测量孔板未包含在供货范围内。

1 Metering orifice is not included in the scope of delivery.

LA...– 变化
LA... – Variations

▼ **压力 切断示意图 LA.D**
Circuit diagram LA.D with pressure cut-off

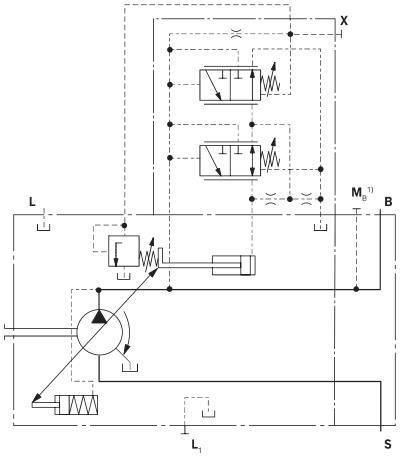

▼ **单独流量控制示意图 LA.S**
Circuit diagram LA.S with separate flow control

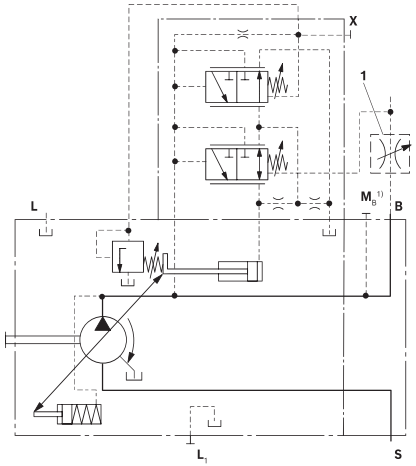

1 测量孔板未包含在供货范围内。
The metering orifice is not included in the scope of delivery.

▼ **远程控制压力切断示意图 LA.DG**
▼ **Circuit diagram LA.DG** with pressure cut-off, remotely controlled

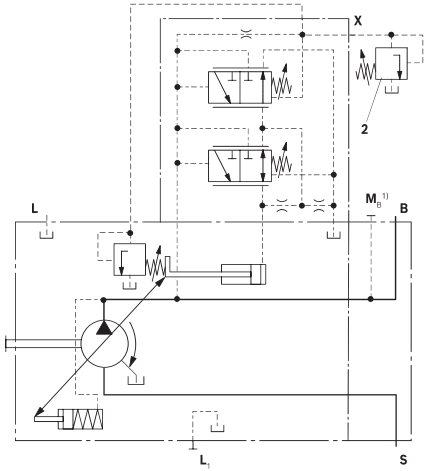

2 测量孔板未包含在供货范围内。
The pressure relief valve is not included in the scope of delivery.

NVICKS® 威克斯液压 VICKS HYDRAULIC

LA10VSO 轴向柱塞变量泵
Axial piston variable pump

ED –电动液压压力控制

ED 阀通过规定的可变线圈电流设置为一定压力。
当执行器（负载压力）有变化时，控制柱塞的位置将改变。
在此，泵摆动角（流量）增加或降低，直至重新达到电动预设的调定压力为止。
因此，泵只能输送执行器可以接受的液压油量。通过给定可变线圈电流，可以无级调节压力。
当电线圈电流变为零时，则可通过可调液压切断装置将压力限制为 p_{max} 。（在断电时确保其余功能，例如用于风机控制）ED 控制的响应时间特性曲线已根据风机的应用经过优化。
订购时，请以明文形式注明应用类型。

▼ **静态电流压力特性曲线 ED**（在泵处于零行程时测得的负特性曲线）
Current/pressure characteristic curve ED
(negative characteristic curve)

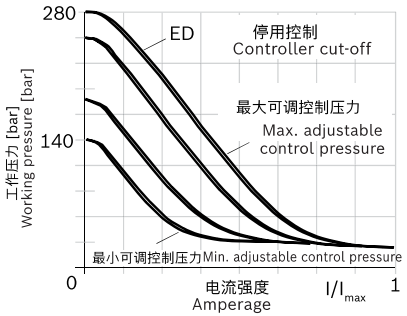

Setting point (control current for start of control at p_{max})

静态电流压力特性曲线的迟滞 < 3 bar。
Hysteresis static current-pressure characteristic curve < 3 bar.

ED – Electrohydraulic pressure control

The ED valve is set to a certain pressure by a specified variable solenoid current.
When changing the consumer (load pressure), this causes an increase or decrease in the pump swivel angle (flow) in order to maintain the electrically set pressure level.
The pump thus only delivers as much hydraulic fluid as the actuators can take. The desired pressure level can be set steplessly by varying the solenoid current.
As the solenoid current signal drops towards zero, the pressure will be limited to p_{max} by an adjustable hydraulic pressure cut-off (secure fail safe function in case of power failure, e.g. for fan speed control). The swivel time characteristic of the ED control was optimized for the use as a fan drive system.
When ordering, specify the type of application in plain text.

- Pilot fluid consumption: 3 to 4.5 l/min.
- For standby standard setting, see the following diagram; other values on request.

▼ **压力设置对于备用模式的影响（受到最大程度的激励）**
Influence of the pressure setting on standby (maximum energization)

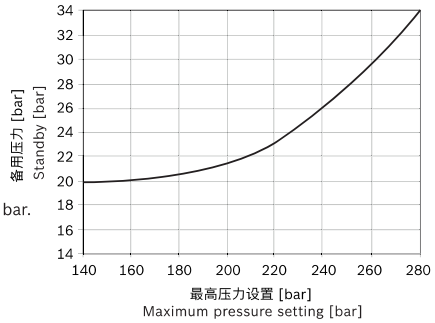

LA10VSO 轴向柱塞变量泵
Axial piston variable pump

▼ 流量压力特性曲线 Flow-pressure characteristic curve

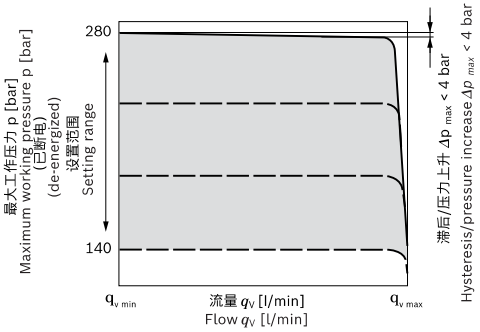

▼ 意示图Circuit diagram ED71/ED72

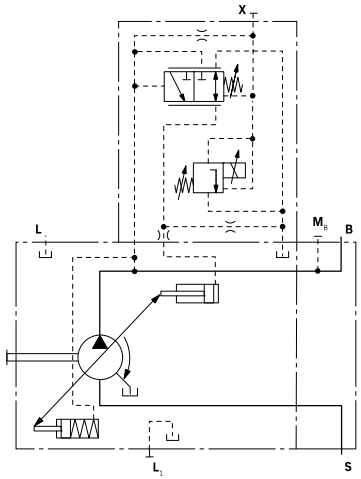

n_1 = 1500 转/分钟且 t_{fluid} = 50 °C 时，特性曲线有效。
先导流体消耗：3 至 4.5 l/min。
备用标准设置，参见右侧示意图，其它数值根据要求提供。

Characteristic curves valid at n_1 = 1500 rpm and t_{fluid} = 50°C.
- Pilot fluid consumption: 3 to 4.5 l/min.
- For standby standard setting, see the following diagram; other values on request.

电磁铁技术数据	ED71	ED72
电压	12 V (±20 %)	24 V (±20 %)
控制电流		
压力为 p_{min} 时的调节初始值	100 mA	50 mA
压力为 p_{max} 时的调节最终值	1200 mA	600 mA
限制电流	1.54 A	0.77 A
公称电阻（20 °C 时）	5.5 Ω	22.7 Ω
抖频	100 至 200 Hz	100 至 200 Hz
启动时间	100 %	100 %
有关防护类型，请参见第103页的插头设计		

阀门工作温度范围 -20 °C 至 +115 °C

Technical data, solenoids	ED72
Voltage	24 V (±20%)
Control current	
Start of control at p_{max}	50 mA
Start of control at p_{min}	600 mA
Current limit	0.77 A
Nominal resistance (at 20 °C)	22.7 Ω
Dither frequency	100 Hz
Recommended amplitude Peak to peak	120 mA
Duty cycle	100%
Type of protection: see connector version page 103	

Operating temperature range at valve -20 °C to +115 °C

Notice!
With **ED72**, de-energized operating condition (jump from 50 to 0 mA) results in a pressure increase of the maximum pressure of 4 to 5 bar.

LA10VSO 轴向柱塞变量泵
Axial piston variable pump

ER –电动液压压力控制

ER 阀通过规定的可变线圈电流设置为一定压力。
当执行器（负载压力）有变化时，控制柱塞的位置将改变。
在此，泵摆动角（流量）增加或降低，直至重新达到电动预设的调定压力为止。
因此，泵只能输送执行器可以接受的液压油量。通过给定可变线圈电流，可以无级调节压力。
当线圈电流变为零时，压力将被限制为 p_{min}（备用）。
请注意第 60 页上的项目计划注意事项。

▼ 静态电流压力特性曲线 ER
（在泵处于零行程时测量的正特性曲线）
Current/pressure characteristic curve ED
(positive characteristic curve)

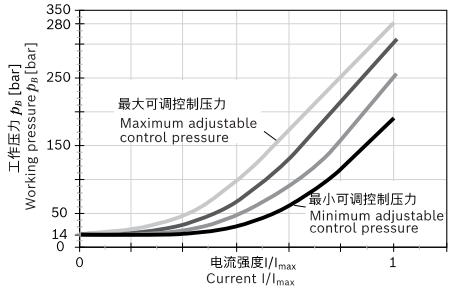

静态电流压力特性曲线的迟滞 < 3 bar。
压力设置对备用模式的影响 ±2 bar.
Hysteresis static current-pressure characteristic curve < 3 bar.
Influence of pressure setting on standby ± 2 bar.

▼ 流量压力特性曲线
Flow-pressure characteristic curve

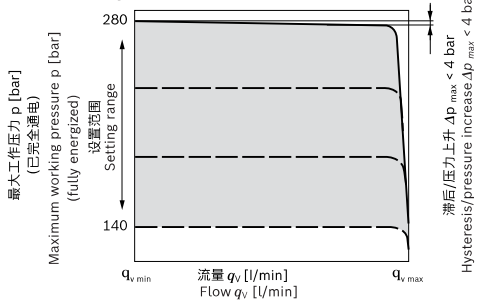

n_1 = 1500 转/分钟且 t_{fluid} = 50 °C 时，特性曲线有效。
先导流体消耗：3 至 4.5 l/min。
备用标准 14 bar，其他数值根据要求提供。

ER – Electrohydraulic pressure control

The ER valve is set to a certain pressure by a specified variable solenoid current.
In the case of changes to the actuator (load pressure), the pump swivel angle (flow) increases or decreases until the electrically specified set pressure has been reached again.
The pump thus only delivers as much hydraulic fluid as the consumers can take. The desired pressure level can be set steplessly by varying the solenoid current.
If the solenoid current drops towards zero, the pressure will be limited to p_{min}
(standby) by an adjustable hydraulic pressure cut off.
Observe project planning note.

▼ Circuit diagram 意示图 ER71/ER72

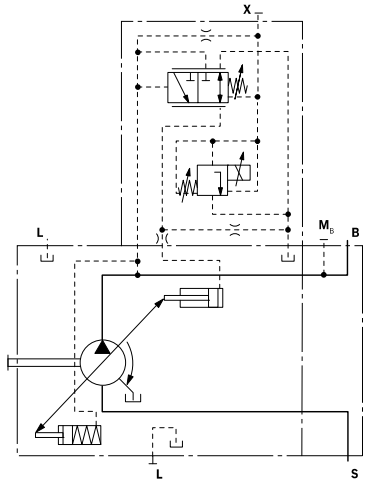

Characteristic curves valid at n_1 = 1500 rpm and t_{fluid} = 50°C.
Pilot fluid consumption: 3 to 4.5 l/min.
Standby standard 14 bar. Other values on request.

LA10VSO 轴向柱塞变量泵
Axial piston variable pump

电磁铁技术数据	ER71	ER72
电压	12 V (±20 %)	24 V (±20 %)
控制电流		
压力为 p_{min} 时的控制初始值	100 mA	50 mA
压力为 p_{max} 时的控制最终值	1200 mA	600 mA
限制电流	1.54 A	0.77 A
公称电阻（20 ℃ 时）	5.5 Ω	22.7 Ω
抖频	100 至 200 Hz	100 至 200 Hz
启动时间	100 %	100 %
有关防护类型，请参见第103页		

阀门工作温度范围 -20 ℃ 至 +115 ℃

Technical data, solenoids	ER72
Voltage	24 V (±20%)
Control current	
Start of control at p_{min}	50 mA
End of control at p_{max}	600 mA
Current limit	0.77 A
Nominal resistance (at 20 °C)	22.7 Ω
Dither frequency	100 Hz
Recommended amplitude Peak to peak	120 mA
Duty cycle	100%
Type of protection: see connector version page 103	

Operating temperature range at valve -20 °C to +115 °C

Project planning note!
Over-current (I > 600 mA at 24 V) to the ER solenoid can result in pressure increases leading to pump or system damage. Therefore:
- Use I_{max} current limiter solenoids.

NVICKS® 威克斯液压 VICKS HYDRAULIC

LA10VSO 轴向柱塞变量泵
Axial piston variable pump

规格尺寸 45 Dimensions, size 45

DR – 压力控制器
DR – Pressure controller

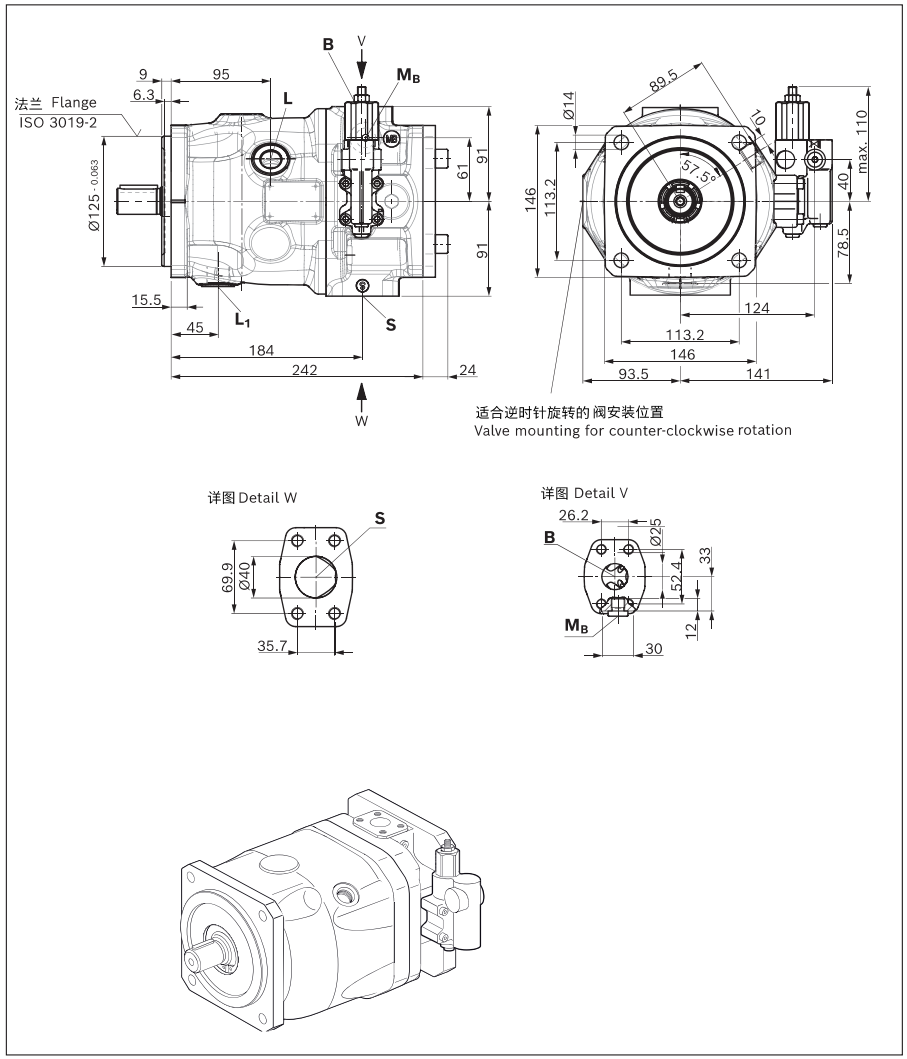

LA10VSO 轴向柱塞变量泵 Axial piston variable pump

规格尺寸 45 Dimensions, size 45

▼ 花键轴，
Splined shaft 1 in (25·4, ISO 3019-1)

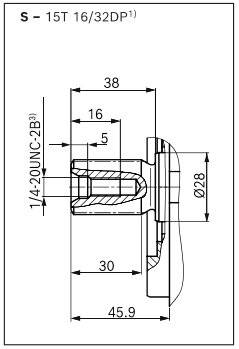

▼ 花键轴，
Splined shaft 1 in (similar to ISO 3019-1)

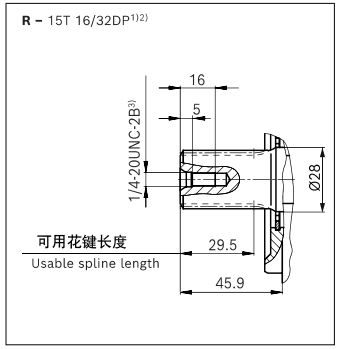

▼ 平键轴
Parallel keyed shaft DIN 6885

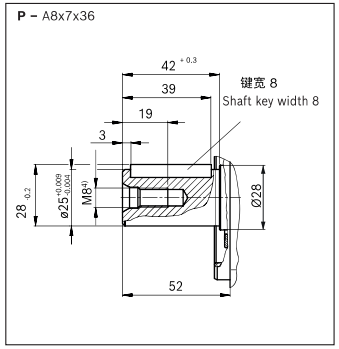

油口	Ports		标准 Standard	规格 Size	p_{max} [bar] 5)	状态 State 9)
B	工作管路油口（标准压力系列） 紧固螺纹	Working port (standard pressure series) Fastening thread	SAE J518 6) DIN 13	1 in M10 x 1.5; 17（深）deep	350	O
S	吸油口（标准压力系列） 紧固螺纹	Suction port (standard pressure series) Fastening thread	SAE J518 6) DIN 13	1 1/2 in M12 x 1.75; 20（深）deep	10	O
L	泄油口	Drain port	DIN 3852 7)	M22 x 1.5; 14（深）deep	2	O 8)
L_1	泄油口	Drain port	DIN 3852 7)	M22 x 1.5; 14（深）deep	2	X 8)
X	控制压力	Pilot pressure	DIN 3852	M14 x 1.5; 12（深）deep	350	O
X	控制压力（带有DG调节时）	Pilot pressure (with DG-control)	DIN ISO 228	G 1/4 in; 12（深）deep	280	O
M_B	测量压力 B	Measuring pressure **B**	DIN 3852 7)	G 1/4 in; 12（深）deep	350	X

1) 渐开线花键（符合ANSI B92.1a），30° 压力角，平齿根，侧面配合，公差等级5
2) 花键（符合ANSI B92.1a），花键的跳动量与标准值存在偏差。
3) 符合ASME B1.1 标准的螺纹
4) 符合DIN 332 标准的中心孔（符合DIN 13 标准的螺纹）
5) 根据不同应用情况，可能会出现瞬时压力峰值。选择测量设备和配件时应注意这一点。
6) 公制紧固螺孔与标准值之间存在偏差
7) 孔口平面可以比标准规定的深。
8) 根据安装位置，必须连接L 或L_1（也可参见第104页开始的安装说明）。
9) O = 必须连接（交付时堵上）X = 堵上（正常运行条件下）

1) Involute spline according to ANSI B92.1a, 30° pressure angle, flat root, side fit, tolerance class 5
2) Splines according to ANSI B92.1a, spline runout is a deviation from standard ISO 3019-1.
3) Thread according to ASME B1.1
4) Center bore according to DIN 332 (thread according to DIN 13)
5) Depending on the application, momentary pressure peaks can occur. Keep this in mind when selecting measuring devices and fittings.
6) Daviation between metric fastening screw and standard.
7) The countersink may be deeper than specified in the standard.
8) Depending on the installation position, **L** or L_1 must be connected (also see installation instructions on page 104).
9) O = Must be connected (plugged on delivery)
X = Plugged (in normal operation)

LA10VSO 轴向柱塞变量泵 Axial piston variable pump

▼ **DG – 两点直动式控制**
DG – Two-point control, direct operated

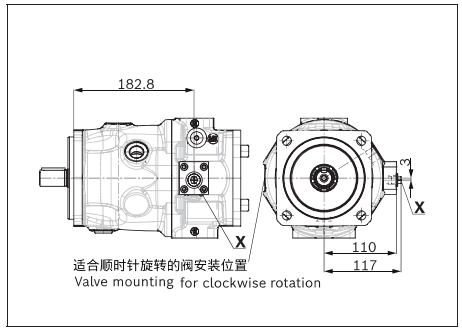

▼ **LA.DS – 压力、流量和功率控制**
LA.DS – Pressure, flow and power controller

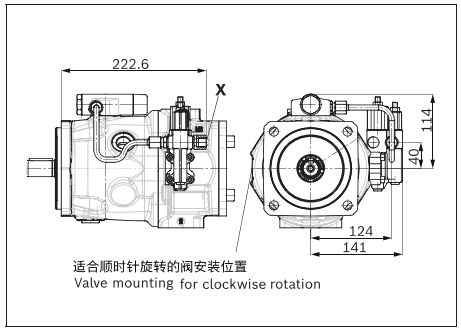

▼ **DRG –远程控制压力控制器**
DRG – Pressure controller, remotely controlled

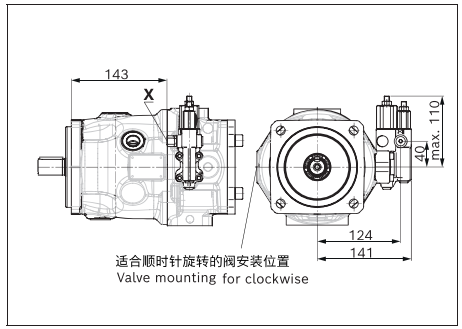

▼ **LA.DG – Power controller with pressure cut off, remote controlled**

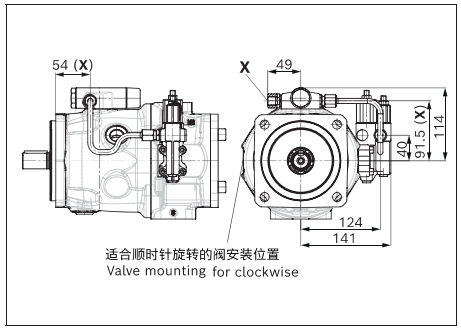

▼ **DRF/DRS – 压力和流量控制器**
DRF/DRS – Pressure, flow controller

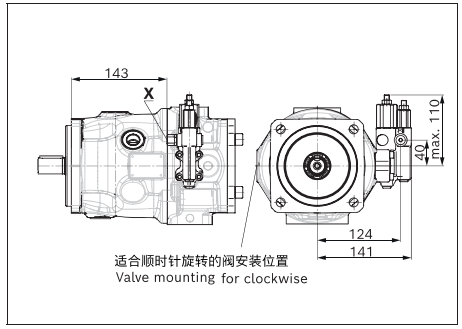

▼ **ED7./ER7.–电动压力控制器**
ED7./ER7. – Pressure controller, electric

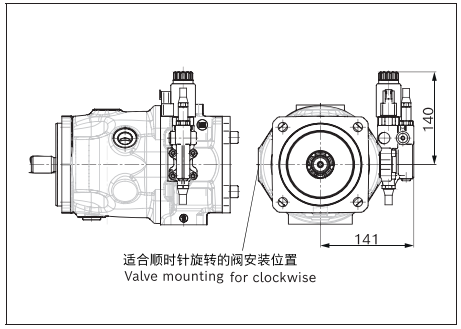

LA10VSO 轴向柱塞变量泵
Axial piston variable pump

规格尺寸 71 Dimensions, size 71

DR – 压力控制器
DR – Pressure controller

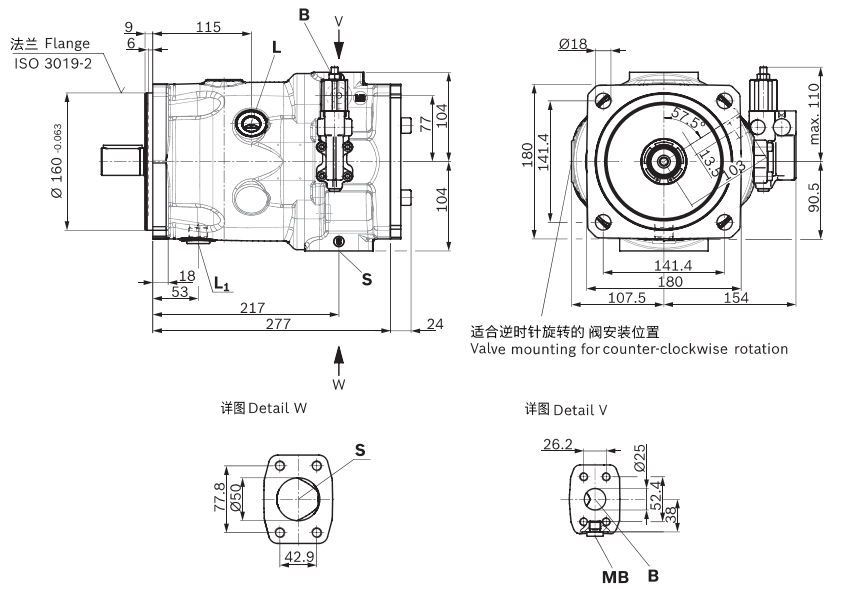

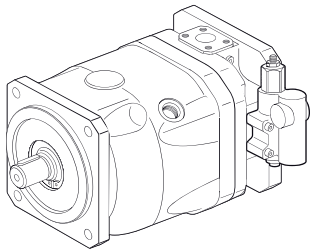

LA10VSO 轴向柱塞变量泵
Axial piston variable pump

▼ **花键轴 1 1/4 in (SAE J744)**
Splined shaft 1 1/4 in (32-4, ISO 3019-1)

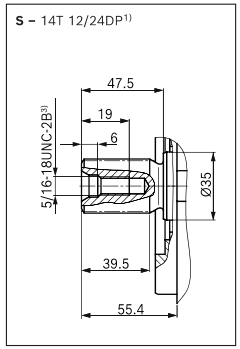

▼ **花键轴 1 1/4 in (SAE J744)**
Splined shaft 1 1/4 in (similar to ISO 3019-1)

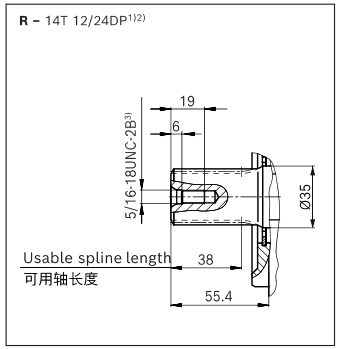

▼ **平键轴 DIN 6885**
Parallel keyed shaft DIN 6885

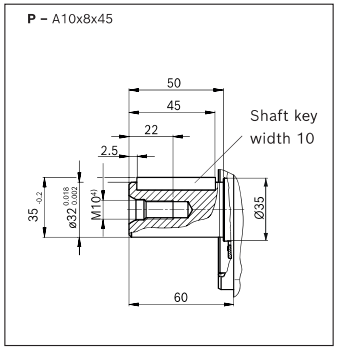

油口 Ports		Standard 标准	规格 Size	p_{max} [bar]5)	状态 State9)
B 工作管路油口（标准压力系列） 紧固螺纹	Working port (standard pressure series) Fastening thread	SAE J518[6)] DIN 13	1 in M10x1.5; 17 deep	350	O
S 吸油口（标准压力系列） 紧固螺纹	Suction port (standard pressure series) Fastening thread	SAE J518[6)] DIN 13	2 in M12 x 1.75; 20 deep	10	O
L 泄油口	Drain port	DIN 3852[7)]	M22 x 1.5; 14 deep	2	O[8)]
L_1 泄油口	Drain port	DIN 3852[7)]	M22 x 1.5; 14 deep	2	X[8)]
X 控制压力	Pilot pressure	DIN 3852	M14 x 1.5; 12 deep	350	O
X 控制压力（带有DG调节时）	Pilot pressure (with DG-control)	DIN 3852-2	G 1/4 in; 12 deep	280	O
M_B 测量压力 B	Measuring pressure **B**	DIN 3852-2[7)]	G 1/4 in; 12 deep	350	X

1) 渐开线花键（符合ANSI B92.1a），30° 压力角，平齿根，侧面配合，公差等级5
2) 花键（符合ANSI B92.1a），花键的跳动量与标准值存在偏差。
3) 符合ASME B1.1 标准的螺纹
4) 符合DIN 332 标准的中心孔（符合DIN 13 标准的螺纹）
5) 根据不同应用情况，可能会出现瞬时压力峰值。选择测量设备和配件时应注意这一点。
6) 公制紧固螺孔与标准值之间存在偏差
7) 孔口平面可以比标准规定的深。
8) 根据安装位置，必须连接L 或L 1（也可参见第104页开始的安装说明）。
9) O = 必须连接（交付时堵上）X = 堵上（正常运行条件下）

1) Involute spline according to ANSI B92.1a, 30° pressure angle, flat root, side fit, tolerance class 5
2) Splines according to ANSI B92.1a, spline runout is a deviation from standard ISO 3019-1.
3) Thread according to ASME B1.1
4) Center bore according to DIN 332 (thread according to DIN 13)
5) Depending on the application, momentary pressure peaks can occur. Keep this in mind when selecting measuring devices and fittings.
6) Daviation between metric fastening screw and standard.
7) The countersink may be deeper than specified in the standard.
8) Depending on the installation position, **L** or **L_1** must be connected (also see installation instructions on page 104).
9) O = Must be connected (plugged on delivery)
X = Plugged (in normal operation)

规格尺寸71 Dimensions, size 71

▼ DG – 两点直动式控制
▼ DG – Two-point control, direct operated

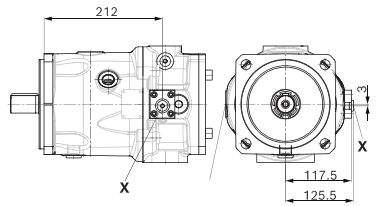

▼ LA.DS – 压力、流量和功率控制
▼ LA.DS – Pressure, flow and power controller

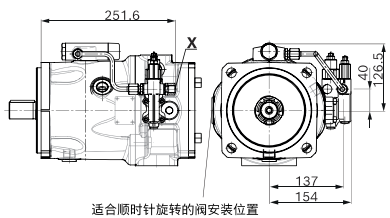

▼ DRG –远程控制压力控制器
▼ DRG – Pressure controller, remotely controlled

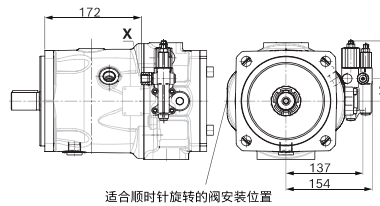

▼ ED7./ER7.–电动压力控制器
▼ LA.DG – Power controller with pressure cut off, remote controlled

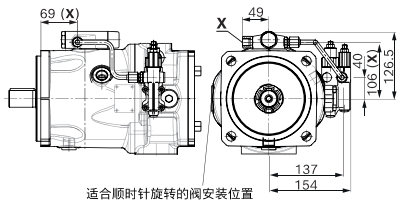

DRF/DRS – 压力和流量控制器
▼ DRF/DRS – Pressure, flow controller

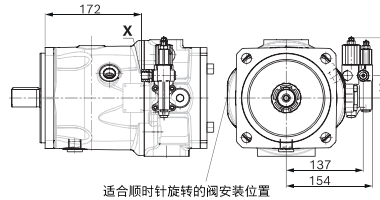

▼ ED7./ER7. – Pressure controller, electric

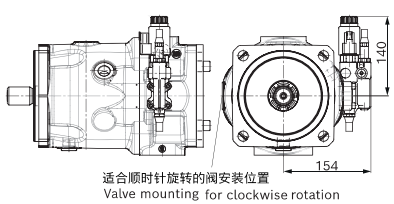

1) ER7.:如果使用中间板压力控制器为 189 mm
1) ER7. 6.93 (176) if using an intermediate plate pressure controller

NVICKS® 威克斯液压 VICKS HYDRAULIC

LA10VSO 轴向柱塞变量泵 Axial piston variable pump

规格尺寸100 Dimensions, size 100

DR – 压力控制器 DR – Pressure controller

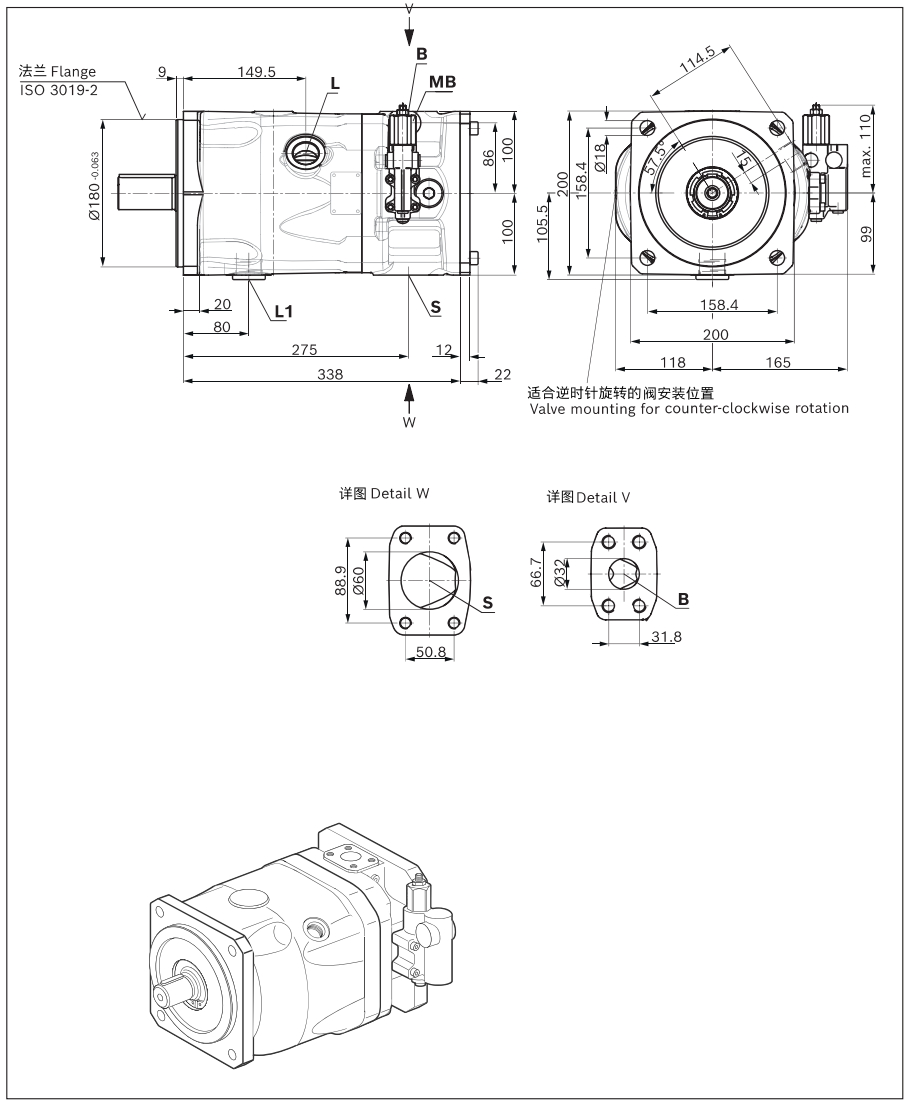

规格尺寸100 Dimensions, size 100

▼ **花键轴 1 1/2 in (SAE J744)**
▼ **Splined shaft 1 1/2 in (38-4, ISO 3019-1)**

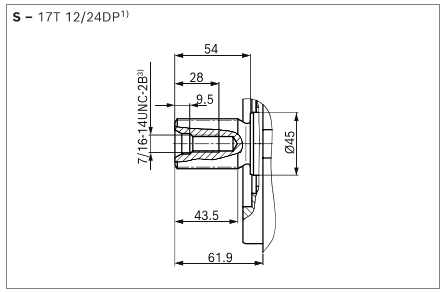

▼ **平键轴 DIN 6885**
▼ **Parallel keyed shaft DIN 6885**

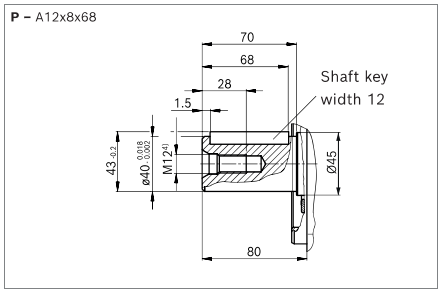

油口 Ports			标准 Standard	规格 Size	p_{max} [bar]5)	状态 State9)
B	工作管路油口（高压管路） 紧固螺纹	Working port (high-pressure series) Fastening thread	SAE J518 6) DIN 13	1 1/4 in M14 x 2; 19 deep	350	O
S	吸油口（标准压力系列） 紧固螺纹	Suction port (standard pressure series) Fastening thread	SAE J518 6) DIN 13	2 1/2 in M12 x 1.75; 17 deep	10	O
L	泄油口	Drain port	DIN 3852 7)	M33 x 2; 16 deep	2	O 8)
L_1	泄油口	Drain port	DIN 3852 7)	M33 x 2; 16 deep	2	X 8)
X	控制压力	Pilot pressure	DIN 3852	M14 x 1.5; 12 deep	350	O
X	控制压力（带有DG调节时）	Pilot pressure (with DG-control)	DIN 3852-2	G 1/4 in; 12 deep	280	O
M_B	测量压力 B	Measuring pressure **B**	DIN 3852-2 7)	G 1/4 in; 12 deep	350	X

1) 渐开线花键（符合ANSI B92.1a），30° 压力角，平齿根，侧面配合，公差等级5
2) 花键（符合ANSI B92.1a），花键的跳动量与标准值存在偏差。
3) 符合ASME B1.1 标准的螺纹
4) 符合DIN 332 标准的中心孔（符合DIN 13 标准的螺纹）
5) 根据不同应用情况，可能会出现瞬时压力峰值。选择测量设备和配件时应注意这一点。
6) 公制紧固螺孔与标准值之间存在偏差
7) 孔口平面可以比标准规定的深。
8) 根据安装位置，必须连接L 或L_1（也可参见第104页开始的安装说明）。
9) O = 必须连接（交付时堵上）X = 堵上（正常运行条件下）

1) Involute spline according to ANSI B92.1a, 30° pressure angle, flat root, side fit, tolerance class 5
2) Splines according to ANSI B92.1a, spline runout is a deviation from standard ISO 3019-1.
3) Thread according to ASME B1.1
4) Center bore according to DIN 332 (thread according to DIN 13)
5) Depending on the application, momentary pressure peaks can occur. Keep this in mind when selecting measuring devices and fittings.
6) Daviation between metric fastening screw and standard.
7) The countersink may be deeper than specified in the standard.
8) Depending on the installation position, **L** or **L_1** must be connected (also see installation instructions on page 104).
9) O = Must be connected (plugged on delivery)
X = Plugged (in normal operation)

规格尺寸100 Dimensions, size 100

▼ **DG – 两点直动式控制**
▼ **DG – Two-point control, direct operated**

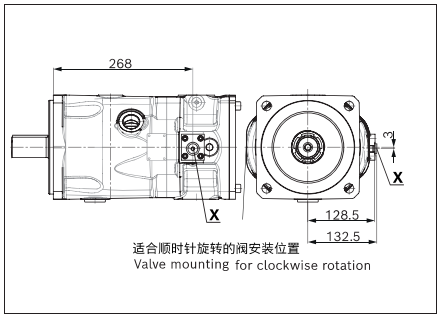

▼ **LA.DS – 压力、流量和功率控制**
▼ **LA.DS – Pressure, flow and power controller**

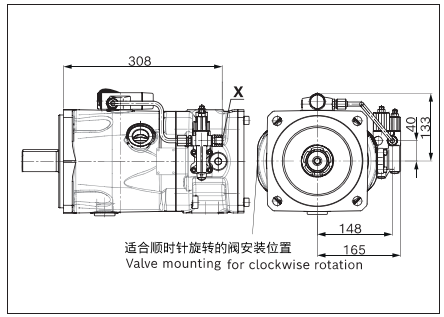

▼ **DRG –远程控制压力控制器**
▼ **DRG – Pressure controller, remotely controlled**

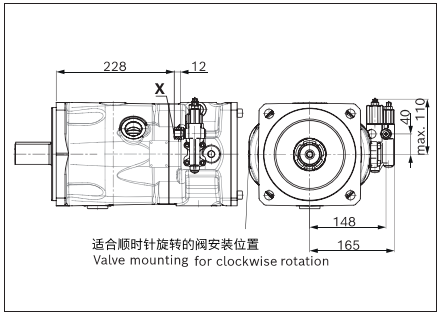

▼ **ED7./ER7.–电动压力控制器**
▼ **LA.DG – Power controller with pressure cut off, remote controlled**

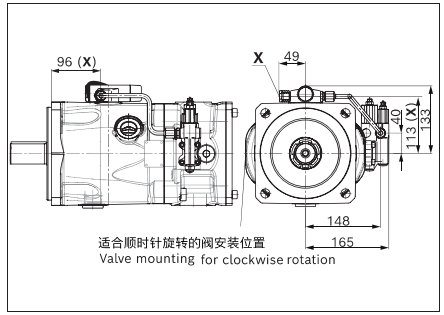

DRF/DRS – 压力和流量控制器
▼ **DRF/DRS – Pressure, flow controller**

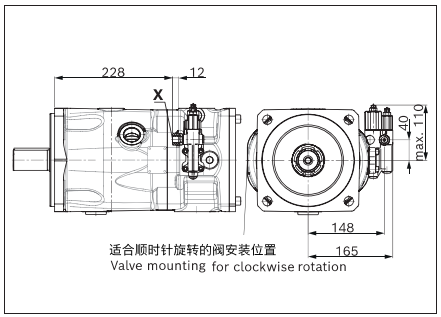

▼ **ED7./ER7. – Pressure controller, electric**

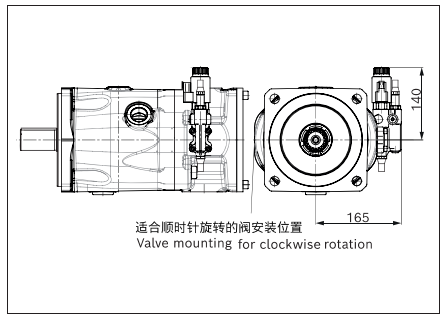

1) ER7.:如果使用中间板压力控制器为 200 mm

1) ER7. 7.87 (200) if using an intermediate plate pressure controller

LA10VSO 轴向柱塞变量泵
Axial piston variable pump

规格尺寸 140 Dimensions, size 140

DR – 压力控制器
DR – Pressure controller, with port plate 22/32

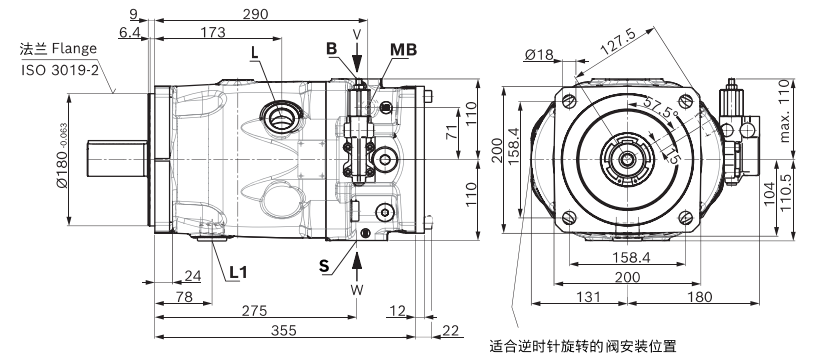

适合逆时针旋转的阀安装位置
Valve mounting for counter-clockwise rotation

详图 Detail W

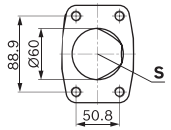

详图 Detail V

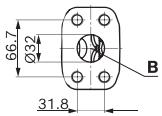

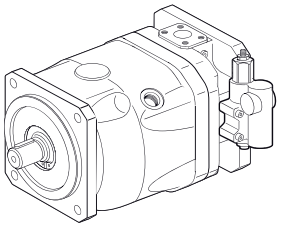

LA10VSO 轴向柱塞变量泵
Axial piston variable pump

▼ 花键轴1 3/4 in SAE J744
▼ Splined shaft 1 3/4 in (44-4, ISO 3019-1)

S – 13T 8/16DP[1)]

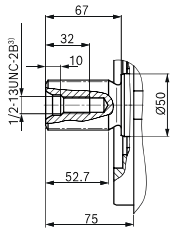

▼ 圆柱平键轴 DIN 6885
▼ Parallel keyed shaft DIN 6885

P – A12x8x68

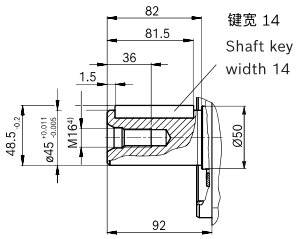

油口 Ports			标准 Standard	规格 Size	p_{max} [bar][5)]	状态 State [9)]
B	工作管路油口（高压管路） 紧固螺纹	Working port (high-pressure series) Fastening thread	SAE J518[6)] DIN 13	1 1/4 in M14 x 2; 19 deep	350	O
S	吸油口（标准压力系列） 紧固螺纹	Suction port (standard pressure series) Fastening thread	SAE J518[6)] DIN 13	2 1/2 in M12 x 1.75; 17 deep	10	O
L	泄油口	Drain port	DIN 3852[7)]	M33 x 2; 16 deep	2	O[8)]
L_1	泄油口	Drain port	DIN 3852[7)]	M33 x 2; 16 deep	2	X[8)]
X	控制压力	Pilot pressure	DIN 3852	M14 x 1.5; 12 deep	350	O
X	控制压力（带有DG调节时）	Pilot pressure (with DG-control)	DIN 3852-2	G 1/4 in; 12 deep	280	O
M_B	测量压力 B	Measuring pressure **B**	DIN 3852-2[7)]	G 1/4 in; 12 deep	350	X

1) 渐开线花键（符合ANSI B92.1a），30° 压力角，平齿根，侧面配合，公差等级5
2) 花键（符合ANSI B92.1a），花键的跳动量与标准值存在偏差。
3) 符合ASME B1.1 标准的螺纹
4) 符合DIN 332 标准的中心孔（符合DIN 13 标准的螺纹）
5) 根据不同应用情况，可能会出现瞬时压力峰值。选择测量设备和配件时应注意这一点。
6) 公制紧固螺孔与标准值之间存在偏差
7) 孔口平面可以比标准规定的深。
8) 根据安装位置，必须连接L 或L_1（也可参见第104页开始的安装说明）。
9) O = 必须连接（交付时堵上）X = 堵上（正常运行条件下）

1) Involute spline according to ANSI B92.1a, 30° pressure angle, flat root, side fit, tolerance class 5
2) Splines according to ANSI B92.1a, spline runout is a deviation from standard ISO 3019-1.
3) Thread according to ASME B1.1
4) Center bore according to DIN 332 (thread according to DIN 13)
5) Depending on the application, momentary pressure peaks can occur. Keep this in mind when selecting measuring devices and fittings.
6) Daviation between metric fastening screw and standard.
7) The countersink may be deeper than specified in the standard.
8) Depending on the installation position, **L** or **L_1** must be connected (also see installation instructions on page 104).
9) O = Must be connected (plugged on delivery)
X = Plugged (in normal operation)

LA10VSO 轴向柱塞变量泵
Axial piston variable pump

▼ **DG – 两点直动式控制**
DG – Two-point control, direct operated, port plate 22/32

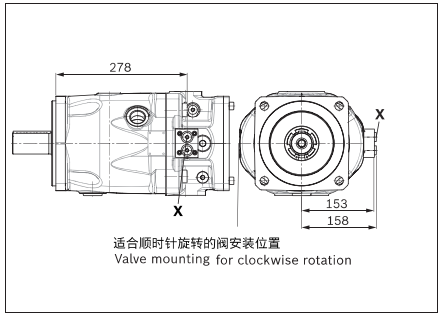

▼ **LA.DS – 压力、流量和功率控制**
LA.DS – Pressure, flow and power controller, port plate 22/32

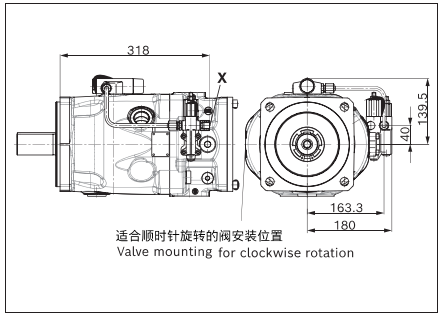

▼ **DRG –远程控制压力控制器**
DRG – Pressure controller, remote controlled, port plate 22/32

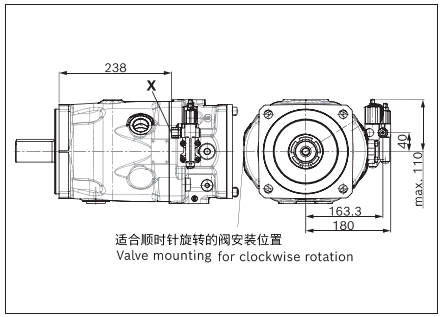

▼ **LA.DG – Power controller with pressure cut off, remote controlled, port plate 22/32**

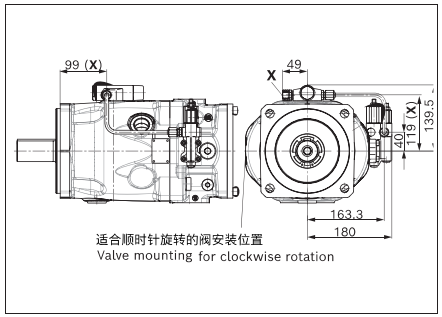

▼ **DRF/DRS – 压力和流量控制器**
DRF/DRS – Pressure, flow controller, port plate 22/32

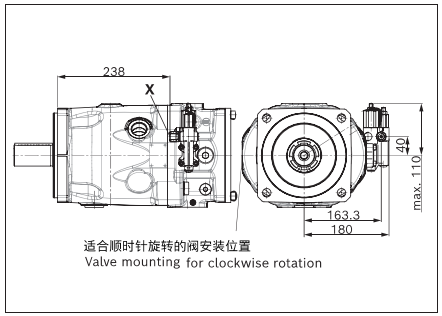

▼ **ED7./ER7.–电动压力控制器**
ED7./ER7. – Pressure controller, electric, port plate 22/32

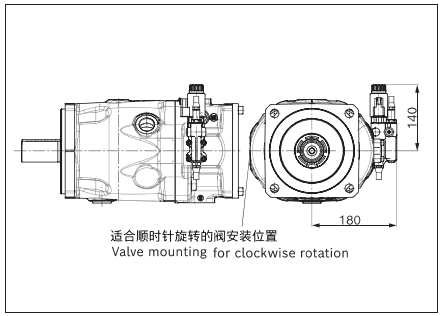

1) ER7.:如果使用中间板压力控制器为 215 mm

1) ER7. 7.87 (200) if using an intermediate plate pressure controller

LA10VSO 轴向柱塞变量泵
Axial piston variable pump

通轴驱动尺寸 Dimensions, through drive

For flanges and drive shafts according to ISO 3019-2

法兰 Flange 直径 Diameter	附件2) Mounting 2)	花键轴套1) 直径 Hub for splined shaft1) Diameter		所有规格的供应情况 Availability across sizes 45	71	100	140	Code
80-2		3/4 in	11T 16/32DP	●	●	●	●	UB2
				–	–	–	●	KB2
100-2		7/8 in	13T 16/32DP	●	●	●	●	UB3
				–	–	–	●	KB3

● = 可供货　○ = 根据需要供货　● = Available　○ = On request

▼ **80-2**

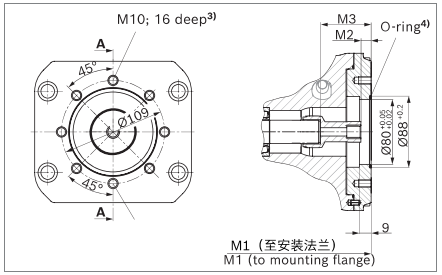

UB2 (19-4 (A-B))	NG	M1	M2[5]	M3[5]
	45	264	19	39.4
	71	299	20.8	41.2
	100	360	19	40
	140	377	18.6	39.6

▼ **100-2**

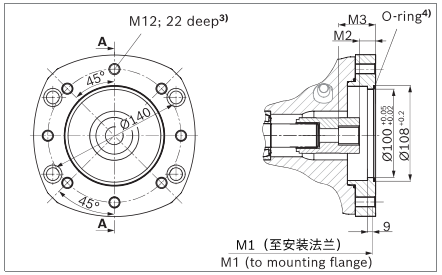

UB3 (22-4 (B))	NG	M1	M2[5]	M3[5]
	45	264	18	42.4
	71	299	19.8	44.2
	100	360	18	42.3
	140	377	17.6	41.9

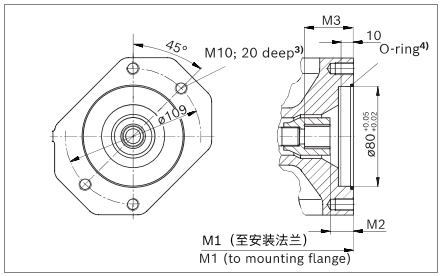

KB2 (19-4 (A-B))	NG	M1	M2[5]	M3[5]
	140	350	18.4	39.4

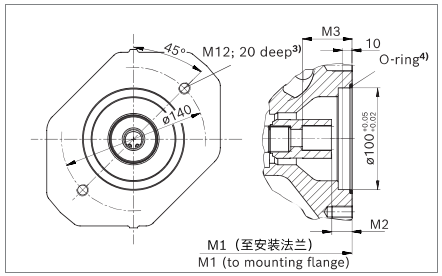

KB3 (22-4 (B))	NG	M1	M2[5]	M3[5]
	140	350	17.4	41.7

1) 符合ANSI B92.1a，30°压力角，平齿根，侧面配合，公差等级5
2) 从顶部带控制的通轴驱动看通孔安装面
3) 螺纹符合DIN 13 标准，请注意第101页有关最大紧固扭矩的一般说明。
4) O 形密封圈包含在供货范围内

1) According to ANSI B92.1a, 30° pressure angle, flat root, side fit, tolerance class 5
2) Mounting holes pattern viewed on through drive with control at top
3) Thread according to DIN 13
4) O-ring included in the scope of delivery

LA10VSO 轴向柱塞变量泵
Axial piston variable pump

法兰 ISO 3019-1 (SAE J744) Flange ISO 3019-1 (SAE J744) 直径 Diameter	附件[2] Attachment[2]	花键轴套[1] Hub for splined shaft[1] 直径	Diameter	所有规格的供应情况 Availability over sizes 45	71	100	140	代码 Code
82-2 (A)		5/8 in	9T 16/32DP	●	●	●	●	U01
		3/4 in	11T 16/32DP	●	●	●	●	U52

● = 可供货　○ = 根据需要供货　● = Available　○ = On request

▼ 82-2 (A)

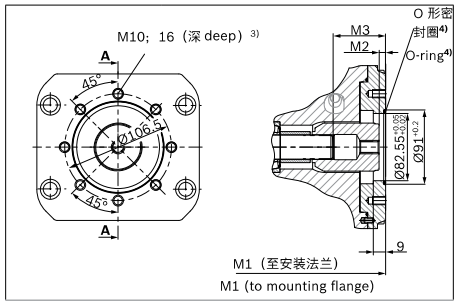

▼ 82-2 (A)

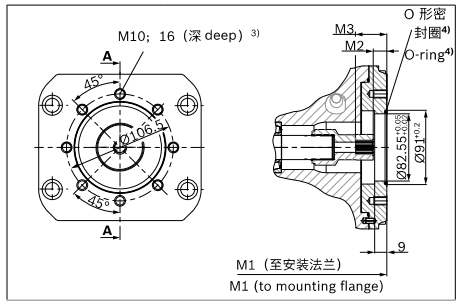

U01 (SAE J744 16-4 (A))	NG	M1	M2	M3
	45	264	根据需要供货 On request	
	71	299	9.3	61.3
	100	360	10.5	65
	140	377	根据需要供货 On request	

U52 SAE J744 19-4 (A-B))	NG	M1	M2	M3
	45	264	18.6	38.7
	71	299	20.7	41.4
	100	360	17	38
	140	377	19	38.6

1) 符合ANSI B92.1a，30°压力角，平齿根，侧面配合，公差等级5
2) 从顶部带控制的通轴驱动看通孔安装面
3) 螺纹符合DIN 13 标准，请注意第101页有关最大紧固扭矩的一般说明。
4) O 形密封圈包含在供货范围内

1) According to ANSI B92.1a, 30° pressure angle, flat root, side fit, tolerance class 5
2) Mounting holes pattern viewed on through drive with control at top
3) Thread according to DIN 13
4) O-ring included in the scope of delivery

LA10VSO 轴向柱塞变量泵
Axial piston variable pump

法兰 ISO 3019-2（公制） Flange, ISO 3019-2 (metric) 直径 Diameter	附件[2] Attachment[2]	花键轴套[1] Hub for splined shaft[1] 直径	Diameter	所有规格的供应情况 Availability over sizes 45	71	100	140	代码 Code
101-2 (B)		7/8 in	13T 16/32DP	●	●	●	●	U68
		1 in	15T 16/32DP	●	●	●	●	U04

● = 可供货　○ = 根据需要供货　● = Available　○ = On request

▼ 101-2

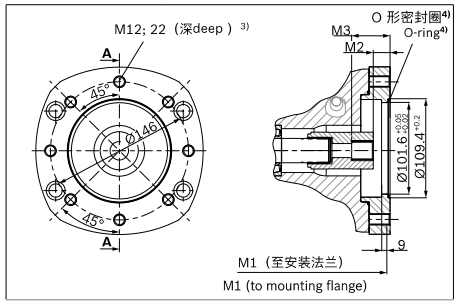

▼ 101-2

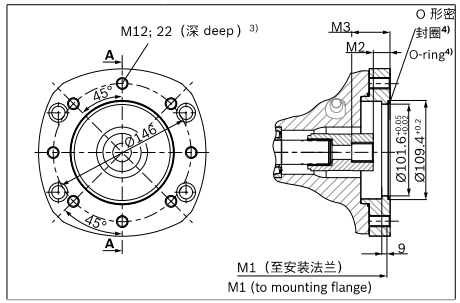

U68 (SAE J744 22-4) (B))	NG	M1	M2	M3
	45	264	18.2	41.5
	71	299	19.7	44.1
	100	360	17.4	41.3
	140	377	17.4	41.6

U04 SAE J744 25-4 (B-B))	NG	M1	M2	M3
	45	264	根据需要供货 On request	
	71	299	20.8	49.1
	100	360	17.6	46.6
	140	377	17.9	46.3

1) 符合ANSI B92.1a，30°压力角，平齿根，侧面配合，公差等级5
2) 从顶部带控制的通轴驱动看通孔安装面
3) 螺纹符合DIN 13 标准，请注意第101页有关最大紧固扭矩的一般说明。
4) O 形密封圈包含在供货范围内

1) According to ANSI B92.1a, 30° pressure angle, flat root, side fit, tolerance class 5
2) Mounting holes pattern viewed on through drive with control at top
3) Thread according to DIN 13
4) O-ring included in the scope of delivery

LA10VSO 轴向柱塞变量泵
Axial piston variable pump

For flanges and drive shafts according to ISO 3019-2

法兰 ISO 3019-2（公制）Flange, ISO 3019-2 (metric) 直径 Diameter	附件[2] Mounting[2]	花键轴套[1] Hub for splined shaft[1] 直径	Diameter	所有规格的供应情况 Availability over sizes 45	71	100	140	代码 Code
125-4	⌘	1 in	15T 16/32DP	●	●	●	●	UE1
160-4	⌘	1 1/4 in	14T 12/24DP	–	●	●	●	UB8

● = 可供货　○ = 根据需要供货　● = Available　○ = On request

▼ **125-4**

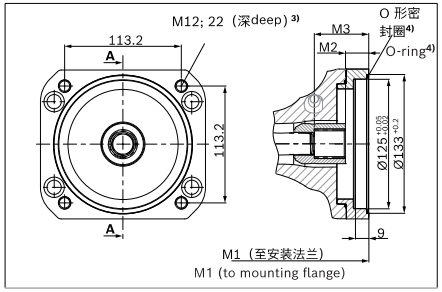

UE1 (SAE J744 25-4(B-B))	NG	M1	M2	M3
	45	264	根据需要供货	
	71	299		
	100	360	18.2	46.9
	140	377	18.5	45.9

▼ **160-4**

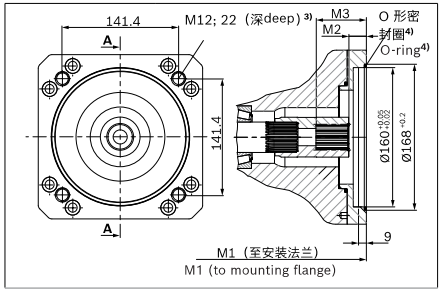

UB8 (SAE J744 32-4 (C))	NG	M1	M2	M3
	71	299	20.1	58.1
	100	360	19.8	56.4
	140	377	19.8	56.4

1) 符合ANSI B92.1a，30°压力角，平齿根，侧面配合，公差等级5
2) 从顶部带控制的通轴驱动看通孔安装面
3) 螺纹符合DIN 13 标准，请注意第101页有关最大紧固扭矩的一般说明。
4) O 形密封圈包含在供货范围内

1) According to ANSI B92.1a, 30° pressure angle, flat root, side fit, tolerance class 5
2) Mounting holes pattern viewed on through drive with control at top
3) Thread according to DIN 13
4) O-ring included in the scope of delivery

NVICKS® 威克斯液压 VICKS HYDRAULIC

LA10VSO 轴向柱塞变量泵
Axial piston variable pump

法兰 ISO 3019-1 (SAE J744) Flange ISO 3019-1 (SAE J744) 直径 Diameter	附件[2] Attachment[2]	花键轴[1] Splined shaft[1] 直径	Diameter	所有规格的供应情况 Availability over sizes 45	71	100	140	代码 Code
127-4 (C)	⌘	1 in	15T 16/32DP	●	●	●	●	UE2
		1 1/4 in	14T 12/24DP	–	●	●	●	U15
127-2 (C)	⌘, ⌘, ⌘	1 1/2in	17T 12/24DP	–	–	●	●	U24

● = 可供货　○ = 根据需要供货　● = Available　○ = On request

▼ **127-4 (C)**

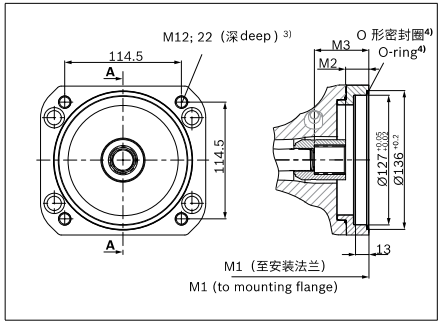

UE2 127-4 (C)	NG	M1	M2	M3
	45	264	18.7	46.6
	71	299	根据需要供货 On request	
	100	360		
	140	377		

U15 127-4 (C)	NG	M1	M2	M3
	71	299	21.8	58.1
	100	360	根据需要供货 On request	
	140	377		

▼ **127-2 (C)**

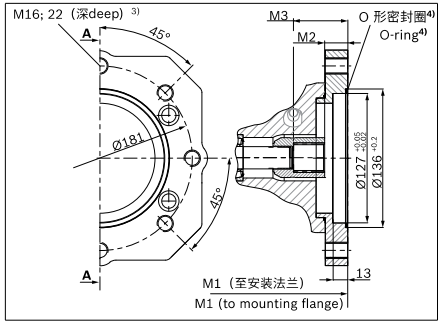

U24 127-2 (C)	NG	M1	M2	M3
	100	360	21.5	62.3
	140	377	10.5	62.3

1) 符合ANSI B92.1a，30°压力角，平齿根，侧面配合，公差等级5
2) 从顶部带控制的通轴驱动看通孔安装面
3) 螺纹符合DIN 13 标准，请注意第101页有关最大紧固扭矩的一般说明。
4) O 形密封圈包含在供货范围内

1) According to ANSI B92.1a, 30° pressure angle, flat root, side fit, tolerance class 5
2) Mounting holes pattern viewed on through drive with control at top
3) Thread according to DIN 13
4) O-ring included in the scope of delivery

LA10VSO 轴向柱塞变量泵
Axial piston variable pump

法兰 ISO 3019-1 (SAE J744) Flange ISO 3019-1 (SAE J744) 直径 Diameter	附件[2] Attachment[2]	花键轴[1] 直径	Splined shaft[1] Diameter	所有规格的供应情况 Availability over sizes 45	71	100	140	代码 Code
152-4 (C)		1 1/2 in	17T 12/24DP	–	–	●	●	U96
		1 3/4 in	13T 8/16DP	–	–	–	●	U17

● = 可供货　○ = 根据需要供货　● = Available　○ = On request

▼ 152-4 (C)

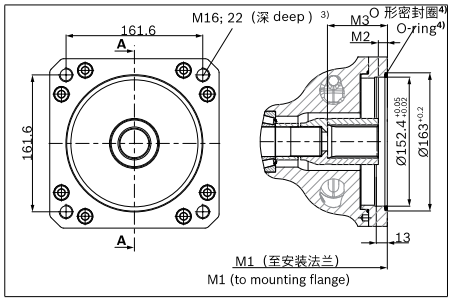

▼ 152-4 (C)

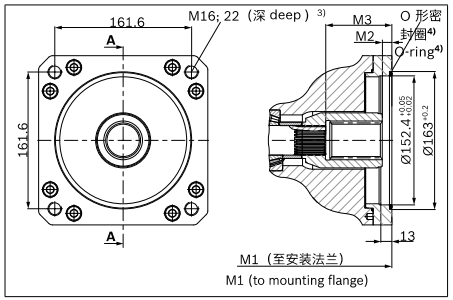

U96 152-4 (D)	NG	M1	M2	M3
	100	360	根据需要供货 On request	
	140	377		

U17 152-4 (D)	NG	M1	M2	M3
	140	377	11.	77.5

1) 符合ANSI B92.1a，30°压力角，平齿根，侧面配合，公差等级5
2) 从顶部带控制的通轴驱动看通孔安装面
3) 螺纹符合DIN 13 标准，请注意第101页有关最大紧固扭矩的一般说明。
4) O 形密封圈包含在供货范围内

1) According to ANSI B92.1a, 30° pressure angle, flat root, side fit, tolerance class 5
2) Mounting holes pattern viewed on through drive with control at top
3) Thread according to DIN 13
4) O-ring included in the scope of delivery

LA10VSO 轴向柱塞变量泵
Axial piston variable pump

配件选项一览

通轴驱动			二次泵附件– 2.泵			
法兰 (ISO) ISO 3019-2	花键轴套	缩写	LA10VSO/32 NG（轴）	LA10VSO/31 NG（轴）	LA10VO/52 和 53 NG（轴）	齿轮泵
80-2	3/4 in	UB2	–	18 (S, R)	10 (S, R)	PGZ
100-2	7/8 in	UB3	–	28 (S, R)	–	PGZ
125-4	1 in	UE1	45 (S, R)	–	–	–
160-4	1 1/4 in	UB8	71 (S, R)	–	–	–
180-4	1 1/2 in	UB9	100 (S)	–	–	–
	1 3/4 in	UB7	140	–	–	–
法兰 (SAE) ISO 3019-1	**花键轴套**	**缩写**	**LA10VSO/32 NG（轴）**	**LA10VSO/31 NG（轴）**	**LA10VO/52 和 53 NG（轴）**	**齿轮泵**
82-2 (A)	5/8 in	U01	–	–	–	AZPF, PGH2
	3/4 in	U52	–	18 (S, R)	10 (S, R)	
101-2 (B)	7/8 in	U68	–	28 (S, R)	–	AZPN, AZPG
	1 in	U04	–	–	–	PGH4
127-4 (C)	1 in	UE2	45 (S, R)	–	–	–
127-4 (C)	1 1/4 in	U15	71 (S)	–	–	–
127-2 (C)	1 1/2 in	U24	100 (S)	–	–	PGH5
152-4 (D)	1 1/2 in	U96	100 (S)	–	–	–
	1 3/4 in	U17	140	–	–	–

Overview of fitting options

Through drive			Attachment of 2nd pump			
Flange (SAE) ISO 3019-1	Hub for splined shaft	Short des.	LA10VSO/32 NG (shaft)	LA10VSO/31 NG (shaft)	LA10VO/52 和 53 (shaft)	Gear pump
82-2 (A)	5/8 in	U01	–	–	–	AZPF, PGH2
	3/4 in	U52	–	18 (S, R)	10 (S, R)	
101-2 (B)	7/8 in	U68	–	28 (S, R)	–	AZPN, AZPG
	1 in	U04	–	–	–	PGH4
127-4 (C)	1 in	UE2	45 (S, R)	–	–	–
127-4 (C)	1 1/4 in	U15	71 (S)	–	–	–
127-2 (C)	1 1/2 in	U24	100 (S)	–	–	PGH5
152-4 (D)	1 1/2 in	U96	100 (S)	–	–	–
	1 3/4 in	U17	140	–	–	–

油口 标准	螺纹尺寸	螺纹孔最大允许紧固扭矩 $M_{G\,max}$	锁紧螺钉 M_V 所需的紧固扭矩	锁紧螺钉内六角规格
DIN ISO 228	G 1/4 in	70 Nm	–	–
ISO 11926	7/16-20 UNF-2B	40 Nm	15 Nm	3/16 in
	1 1/16-12 UNF-2B	360 Nm	147 Nm	9/16 in
DIN 3852	M14x1.5	80 Nm	35 Nm	6 mm
	M16x1.5	100 Nm	50 Nm	8 mm
	M18x1.5	140 Nm	60 Nm	8 mm
	M22x1.5	210 Nm	80 Nm	10 mm
	M27x2	330 Nm	135 Nm	12 mm

组合泵LA10VSO +LA10VSO Combination pumps LA10VSO + LA10VSO

通过使用组合泵，可以带有多个相互独立的油路，
无需副变速机构。
在订购组合泵时，应将第一个泵和第二个泵的型号代码通过“**+**”结合在一起。

订购示例：

LA10VSO100DR/32R-VPB32UB8+
LA10VSO71DRF/32R-VSB22U00

允许使用两个同尺寸的单级泵组合（双联泵），考虑最大 10 g (= 98.1 m/s²) 动态质量加速度，无需额外的支撑架。
对于超过两个泵的组合泵，必须计算安装法兰的允许质量扭矩（请向我们咨询）。

By using combination pumps, it is possible to have multiple, mutually independent circuits without the need for splitter gearboxes.
When ordering combination pumps, the type designations of the 1st and 2nd pump must be linked with a “**+**” sign.

Order example:

LA10VSO100DR/32R-VPB32UB8+
LA10VSO71DRF/32R-VSB22U00

It is permissible to use a combination of two single pumps of the same size (tandem pump) considering a dynamic mass acceleration of maximum 10 g (= 98.1 m/s²) without additional support brackets.
For combination pumps consisting of more than two pumps, the mounting flange must be rated for the permissible mass torque (please consult us).

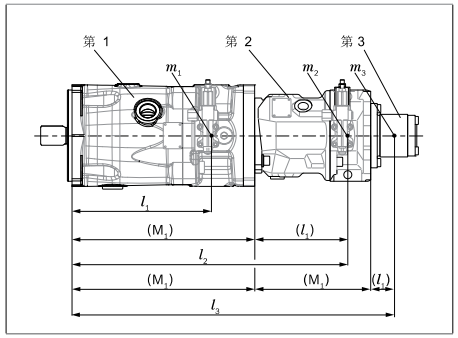

m_1, m_2, m_3	泵的重量	Weight of pump	[lbs (kg)]
l_1, l_2, l_3	与重心之间的距离	Distance, center of gravity	[in (mm)]

$$T_m = (m_1 \bullet l_1 + m_2 \bullet l_2 + m_3 \bullet l_3) \bullet \frac{1}{102} \text{ [Nm]}$$

用于多重泵的计算 Calculation for multiple pumps

l_1	=	前泵与重心之间的距离 (从“允许的质量转动惯量”处取得数值) Distance, center of gravity, front pump (value from “Permissible mass moment of inertia” table)
l_2	=	从通轴驱动图示中取得“M1”的尺寸（第 95-101 页）+ 第 2 个泵的 l_1 Dimension “M1” from through drive drawings (page 95-101) + l_1 of the 2nd pump
l_3	=	从第 1 个泵通轴驱动图示中取得“M1”的尺寸（第 95-101 页）+ 第 2 个泵的“M1”+ 第 3 个泵的 l_1 Dimension “M1” from through drive drawings (page 95-101) of the 1st pump + “M1” of the 2nd pump + l_1 of the 3rd pump

允许的质量转动惯量 Permissible mass moment of inertia

NG				45	71	100	140
	静态 static	T_m	Nm	1370	3000	4500	4500
	10 g (98,1 m/s²) 时的动态 dynamic at 10 g (98.1 m/s²)	T_m	Nm	137	300	450	450
质量 Mass		m	kg	30	47	69	73
与重心之间的距离 Distance from center of gravity		l_1	mm	130	142	169	172

请同时注意第106页的安装提示。
Please also pay attention to the installation information on page 106 .

电磁铁插头 Connector for solenoids

HIRSCHMANN DIN EN 175 301-803-A /ISO 4400

不带双向镇流器二极管 _____H

安装插头时，有以下防护措施可用：

- IP65 (DIN/EN 60529)

电缆配件中的密封圈适合直径为4.5 mm 至10 mm 的线路。
线路接头盒未包含在供货范围内。

HIRSCHMANN DIN EN 175 301-803-A /ISO 4400

without bidirectional suppressor diode _____H

There is the following type of protection with mounted mating connector:

- IP65 (DIN/EN 60529)

The seal ring in the cable fitting is suitable for lines of diameter 0.18 in to 0.39 in (4.5 mm to 10 mm).
The line connector box is not included in the scope of supply.

更改插头位置

如有必要，可以通过转动电磁铁更改插头的位置。
为此，按照如下步骤操作：

- 松开电磁铁的固定螺母(1) 。为此，逆时针转动固定螺母 (1) 一圈。
- 朝向所需的方向转动电磁铁体 (2)。
- 重新拧紧安装螺母。
  紧固扭矩：5+1 Nm.
  (WAF 26，12 边，DIN 3124)

交货时，插头的位置可能与手册或图中所示的位置有所不同。

Changing plug position

If necessary, you can change the position of the connector by turning the solenoid.
To do this, proceed as follows:

- Loosen the mounting nut (**1**) of the solenoid. To do this, turn the mounting nut (**1**) one turn counter-clockwise.
- Turn the solenoid body (**2**) to the desired orientation.
- Retighten the mounting nut.
  Tightening torque: 4+0.7 lb-ft (5+1 Nm).
  (WAF 26, 12-sided DIN 3124)

On delivery, the position of the connector may differ from that shown in the brochure or drawing.

安装螺栓M3 紧固扭矩：
M_A = 0.5 Nm
Mounting bolt M3 tightening torque:
M_A = 0.4 lb-ft (0.5 Nm)

电缆配件M16 x 1.5 紧固扭矩：
M_A = 1.5 bis 2.5 Nm
Cable fitting M16 x 1.5 tightening torque:
M_A = 1.1 to 1.9 lb-ft (1.5 to 2.5 Nm)

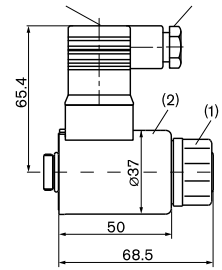

符合 DIN 43650 的电磁铁 Device connector on solenoid according to DIN 43650	线路接头盒 DINEN 175301-803-A 线路螺旋接头 M16x1.5 Line connector box DIN EN 175301-803-A line screw fitting M16x1.5

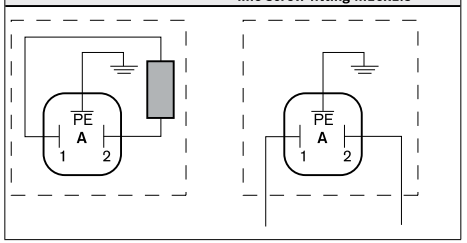

电子控制装置 Electronic controls

控制 Control	电子压力功能 Electronics function	电子元件 electronics		更多信息 Data sheet
电子压力控制 Electric pressure control	受控的电源出口 Controlled power outlet	VT 2000[1)]	模拟 analog	29904
		VT 11029[1)]	模拟 analog	29741
		VT 11030[1)]		

1) 仅限 24 V 公称电压 1) only 24 V nominal voltage

LA10VSO 轴向柱塞变量泵
Axial piston variable pump

安装说明 Installation instructions

一般 General

在调试和运行过程中，轴向柱塞单元必须始终充满液压油并排放空气。若长期停用，也应考虑到上述注意事项。
特别是在“传动轴向上/向下”安装位置，必须彻底进行注油和排气，否则会存在无油运转等危险。
泵外壳内的壳体泄油必须通过位于最高的泄油口（**L**, **L_1**）排放到油箱。
如果多个设备的组合使用一个相同的泄油管路，则必须注意每个泵不超出相应的壳体压力。共用的泄油管路尺寸设计必须能够确保所有链接上的设备在任和运行状态下，尤其是在冷启动时，都不超出最大允许的壳体压力。如果无法做到这点，必要时应铺设单独的泄油管路。
为了获得有利的噪音值，应使用弹性元件分离所有连接管路，并避免在油箱上方安装。
在所有工况下，吸油管路和泄油管路必须通入油箱中最低油位以下的位置。允许吸油高度 h_S源自总压力损失。但却不得高于 $h_{S\ max}$ = 800 mm。在操作过程中以及冷启动过程中，油口 **S** 处的最低吸油压力（参见第 64 页上的技术数据）也不 得低于此最低值。
在设计油箱时，确保吸油管路和泄油管路
之间有足够的距离。这可以防止加热的回油流量被直接吸回至吸油管路。

The axial piston unit must be filled with hydraulic fluid and air bled during commissioning and operation. This must also be considered with a long-term standstill.
Particularly with the “drive shaft up/down” installation position, filling and air bleeding must be carried out completely as there is, for example, a danger of dry running.
The case drain fluid in the pump housing must be discharged to the reservoir via the highest available drain port (**L**, **L_1**).
For combinations of multiple units, the case drain fluid must be drained off at each pump. We recommend laying separate drain lines. If this is not possible, a shared drain line may need to be laid. If a shared drain line is used for this purpose, make sure that the case pressure in each pump is not exceeded. In the event of pressure differences at the drain ports of the units, the shared drain line must be changed so that the minimum permissible case pressure of all connected units is not exceeded in any situation. If this is not possible, separate drain lines must be laid if necessary.
To achieve favorable noise values, decouple all connecting lines using elastic elements and avoid above-reservoir installation.
In all operating conditions, the suction line and drain line must flow into the reservoir below the minimum fluid level. The permissible suction height h_S results from the overall loss of pressure. However, it must not be higher than $h_{S\ max}$ = 31.50 in (800 mm). The minimum suction pressure at port **S** (see the technical data on page 64) must not be fallen short of during operation and at cold starting either.
When designing the reservoir, ensure that there is sufficient distance between the suction line and the drain line. This prevents the heated, return flow from being drawn directly back into the suction line.

关键词和安装提示

关键词	
L (F)	注油 / 排气
S	吸口
L_1	泄油口
SB	隔板（挡板）
$h_{t\ min}$	所需最低浸没深度（200 mm）
h_{min}	至油箱底部的所需最短距离（100 mm）
$h_{ES\ min}$	为了防止轴向柱塞单元排空所需的最小高度（25 mm）。
$h_{S\ max}$	最大允许吸油高度 (800 mm)

1) 由于在此位置无法彻底进行排气和注油，因此在安装前应将泵处于水平位置上排气且注油。

Key	
L (F)	Filling / air bleeding
S	Suction port
L_1	Drain port
SB	Baffle (baffle plate)
$h_{t\ min}$	Minimum necessary immersion depth (7.87 in (200 mm))
h_{min}	Minimum required spacing to reservoir base (3.94 in (100 mm))
$h_{ES\ min}$	Minimum necessary height needed to protect the axial piston unit from draining (0.98 in (25 mm)).
$h_{S\ max}$	Maximum permissible suction height (31.50 in (800 mm))

1) Because complete air bleeding and filling are not possible in this position, the pump should be air bled and filled in a horizontal position before installation.

LA10VSO 轴向柱塞变量泵
Axial piston variable pump

安装位置
参见以下示例 **1** 至 **9**。
其他安装位置可应要求提供
推荐的安装位置：**1** 和 **3**

在油箱下方安装(标准)
在油箱下方安装指轴向柱塞单元安装在油箱外部，最低油位以下。

Installation position
See the following examples **1** to **9**.
Further installation positions are available upon request.
Recommended installation position: **1** and **3**

Below-reservoir installation (standard)
Below-reservoir installation is when the axial piston unit is installed outside of the reservoir below the minimum fluid level.

安装位置	排气	注油
1 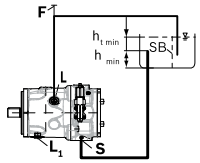	F	F (L)
2[1] 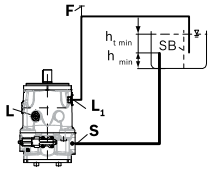	F	F (L_1)
3 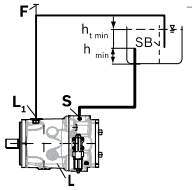	F	F (L_1)

注意
油口 **F** 是外部管道系统的一部分，为此，客户方必须自行做好准备以简化注油和排气过程。

Installation position	Air bleeding	Filling
1 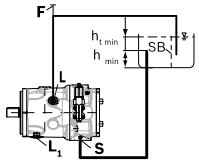	F	F (L)
2[1] 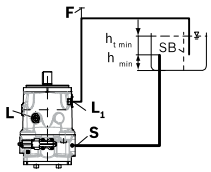	F	F (L_1)
3 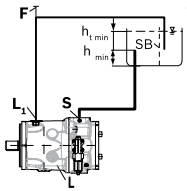	F	F (L_1)

Note
Port **F** is part of the external piping and must be provided by the customer to make filling and air bleeding easier.

LA10VSO 轴向柱塞变量泵
Axial piston variable pump

在油箱上安装 Above-reservoir installation

在油箱上方安装意味着轴向柱塞单元安装在油箱的最低油位上方。为了防止轴向柱塞单元在位置 5 处排油，最高差 $h_{ES\ min}$ 必须至少为 25 mm。遵守最大允许吸油高度 $h_{S\ max}$ = 800 mm。

Above-reservoir installation means the axial piston unit is installed above the minimum fluid level of the reservoir. To prevent the axial piston unit from draining in position 5, the height difference $h_{ES\ min}$ must be at least 0.98 in (25 mm). Observe the maximum permissible suction height $h_{S\ max}$ = 31.50 in (800 mm).

安装位置 Installation position	排气 Air bleeding	注油 Filling
4 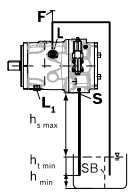	F	F (L)
5[1] 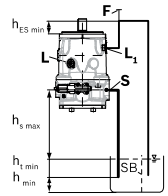	F	F (L_1)
6 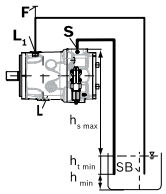	F	F (L_1)

壳体泄油管路中的单向阀仅允许在个别情况下使用。有关认证的信息请向我们咨询。

A check valve in the case drain line is only permissible in individual cases. Consult us for approval.

1) 由于在此位置无法彻底进行排气和注油，因此在安装前应将泵处于水平位置上排气且注油。

1) Because complete air bleeding and filling are not possible in this position, the pump should be air bled and filled in a horizontal position before installation.

安装提示

由于壳体的紧凑设计，必须用内六角凹头螺钉固定轴向柱塞泵。请注意允许的最高表面压力必须符合VDI 2230。

此外，还需要注意第 101 页关于紧固扭矩的信息

油箱内安装

油箱内安装是指轴向柱塞单元安装在油箱内部、最低油位以下。轴向柱塞单元完全位于液压油下方。轴向柱塞单元完全位于液压油下方。如果最低油位等于或低于泵的上部边缘，请参见章节 **“油箱上方安装”**。

带有电气部件(例如电子控制器、传感器) 的轴向柱塞单元不能安装在油箱的油位以下。

Inside-reservoir installation

Reservoir installation is when the axial piston unit is installed in the reservoir below the minimum fluid level. The axial piston unit is completely below the hydraulic fluid.

If the minimum fluid level is equal to or below the upper edge of the pump, see chapter **“Above-reservoir installation”**.

Axial piston units with electrical components (e.g., electric control, sensors) may not be installed in a reservoir below the fluid level.

安装位置 Installation position	排气 Air bleeding	注油 Filling
7 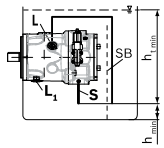	由于位置低于液压油油位而自动排气 automatically due to the position below the hydraulic fluid level	通过已打开的油口 L 或 L_1 自动注油（因为位置低于液压油油位） Automatically via the open port L or L_1 due to the position under the hydraulic fluid level
8 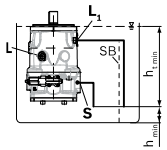		
9[1] 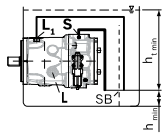		

Assembly note

Due to the compact design of the casing, socket-head screws with a hexagon socket must be used to attach the axial piston pump. Please observe the maximum permissible surface pressure according to VDI 2230.

Apart from this, you should take into account the information regarding tightening torques in the operating instruction.

LA10VSO 轴向柱塞变量泵
Axial piston variable pump

项目规划注意事项 Project planning notes

- LA10VSO 泵设计用于开式回路。
- 轴向柱塞单元的项目规划、组装和调试必须由合格人员进行。
- 在使用轴向柱塞单元前，请完整阅读相应的说明手册。必要时，请向力盛索取这些手册。
- 在完成最终设计之前，请索取必须遵守的安装图。
- 必须遵循此处给定的数据和说明。
- 轴向柱塞单元的特性曲线可能会因不同的工作条件(工作压力、油液温度) 而有所变化。
- 保养：按标准我们的轴向柱塞单元在供货时均带有长达 12 个月的养护保障。养护保障期在最佳的 保存条件下有效，这些保存条件必须在技术数据表 90312 或 操作手册中读取。
- 并非本产品的所有型号都获准用于 ISO 13849 要求的安全功能。如果您需要有关功能安全的可靠性参数（例如: $MTTF_d$），则请向 力盛 的负责联系人咨询。
- 在使用电磁铁时，取决于所应用的控制系统，使用者可能会受到电磁影响。如果使用直流通电，则电磁铁不会产生电磁干扰，并且其运行不会受到电磁的干扰。如果用调制的直流（例如：PWM 信号）进行通电，则会有出现另一种属性的可能。机床制造商必须检查电磁铁对某些人员（例如配戴心脏起搏器）及对其他部件造成影响的可能性。
- 压力控制器并非对抗压力超负荷的防护担保。因此，在液压设备中必须设有溢流阀。
- 工作管路油口：
  - 油口和固定螺纹设计用于最大规定压力。机器或系统制造商必须确保连接元件和管路的安全系数满足规定的工作条件(压力、流量、液压油、温度)。
  - 工作管路油口和功能油口仅设计用于液压管路。

- The LA10VSO axial piston variable pump is intended to be used in open circuit.
- Project planning, installation and commissioning of the axial piston units requires the involvement of skilled personnel.
- Before using the axial piston unit, please read the corresponding instruction manual completely and thoroughly. If necessary, this can be requested from Lixon
- Before finalizing your design, request a binding installation drawing.
- The specified data and notes contained herein must be observed.
- Depending on the operating conditions of the axial piston unit (working pressure, fluid temperature), the characteristic curve may shift. The characteristic curve may also shift due to the dither frequency or control electronics.
- Preservation: Our axial piston units are supplied as standard with preservation protection for a maximum of 12 months. The preservation periods apply under optimal storage conditions, details of which can be found in the data sheet 90312 or the instruction manual.
- Not all versions of the product are approved for use in a safety function according to ISO 13849. Please consult the proper contact at Lixon if you require reliability parameters (e.g. $MTTF_d$) for functional safety.
- Depending on the type of control used, electromagnetic effects can be produced when using solenoids. Applying a direct voltage signal (DC) to solenoids does not create electromagnetic interference (EMI) nor is the solenoid affected by EMI. Electromagnetic interference (EMI) potential exists when operating and controlling a solenoid with a modulated direct voltage signal (e.g. PWM signal) Appropriate testing and measures should be taken by the machine manufacturer to ensure other components or operators (e.g. with pacemaker) are not affected by this potential.
- Pressure controllers are not safeguards against pressure overload. Be sure to add a pressure relief valve to the hydraulic system.
- For drives that are operated for a long period of time with constant rotational speed, the natural frequency of the hydraulic system can be stimulated by the excitation frequency of the pump (rotational speed frequency x 9). This can be prevented with suitably designed hydraulic lines.
- Please note the details regarding the tightening torques of port threads and other threaded joints in the instruction manual.
- The ports and fastening threads are designed for the p_{max} permissible pressures of the respective ports, see the connection tables. The machine or system manufacturer must ensure that the connecting elements and lines correspond to the specified application conditions (pressure, flow, hydraulic fluid, temperature) with the necessary safety factors.
- The working ports and function ports are only intended to accommodate hydraulic lines.

LA10VO 52/53 Series

轴向柱塞变量泵

Axial piston variable pump

特点

装配有轴向柱塞转子组的斜盘式变量泵，用于开式回路中的的静压驱动；
流量与传动速度和排量成比例；
通过调节旋转斜盘角度，可实现流量的无级调节；
实现长久使用寿命的稳定存储；
高允许传动速度；
有利的功率/重量比 - 紧凑尺寸；
低噪音；
出色的吸油特性；
电动液压控制；
功率控制；
电比例摆动角控制；
较短的响应时间；

Features

Variable pump with axial piston rotary group in swashplate.
design for hydrostatic drives in open circuit.
The flow is proportional to the drive speed and the displacement.
The flow can be infinitely varied by adjusting the swashplate angle.
Stable bearing for long service life.
High permissible drive speed.
Favorable power-to-weight ratio – compact dimensions.
Low noise.
Excellent suction characteristics.
Electro-hydraulic pressure control.
Power control.
Electro-proportional swivel angle control.
Short response times.

LA10VO 轴向柱塞变量泵

Axial piston variable pump

系列 52 的订货代码 Ordering code series 52

01	02	03	04		05	06		07	08	09	10	11	12
LA10V(S)	O			/	52		–	V					

轴向柱塞元件 Axial iston unit

		10	28	45	60	85	
01	斜盘设计、变量泵、公称压力250 bar、最大压力315 bar	●	–	–	–	–	LA10VS
	Swashplate design, variable, nominal pressure 250 bar, maximum pressure 315 bar	–	●	●	●	●	LA10V

运行模式 Operation mode

02	泵，开式回路 Pump, open circuit	O

规格（NG）Size (NG)

		10	28	45	60	85
03	几何排量，见第113页的数据表 Geometric displacement, see table of values on page113	10	28	45	60	85

控制设备 Control devices

04	压力控制 Pressure control	液压 hydraulic					●	●	●	●	●	DR
	带流量控制器 with flow controller	液压 hydraulic	X-T 开启 X-T open				●	●	●	●	●	DFR
			X-T 堵住 X-T plugged	带冲洗功能	with flushing function		●	●	●	●	●	DFR1
				无冲洗功能	without flushing function		–	●	●	●	●	DRSC
	带压力切断 with pressure cut-off	液压 hydraulic	远程控制 remotely operated				●	●	●	●	●	DRG
		电气 electric	负控制 negative control			U = 12 V	–	●	●	●	●	ED71
						U = 24 V	–	●	●	●	●	ED72
		电气 electric	正控制 positive control			U = 12 V	–	●	●	●	●	ER71
						U = 24 V	–	●	●	●	●	ER72
	压差控制Differential pressure control	电控制（负控制）electric control (negative control)					–	○	○	○	●	EF..[1]

系列 Series

		10	28	45	60	85	
05	系列 5，索引 2 Series 5, Index 2	●	●	●	●	●	52

旋转方向 Direction of rotation

06	从传动轴上看 View on drive shaft	顺时针 clockwise	R
		逆时针 counter-clockwise	L

密封材料 Sealing material

07	FKM（氟橡胶）FKM (fluor-caoutchouc)	V

传动轴 Drive shaft

08	花键轴 splined shaft ANSI B92.1a	标准轴	standard shaft	●	●	●	●	●	S
		类似于轴“S”，但适合更高的输入扭矩	similar to shaft "S" however for higher input torque	–	●	●	●	●	R
		缩小的直径，有限适用于通轴驱动	reduced diameter, limited suitability for through drive	●	●	●	●	●	U
		类似于轴“U”，但适合更高的扭矩	similar to shaft "U", however for higher torque	–	●	●	●	●	W
	符合 DIN 6885 标准的平键轴，有限适用于通轴驱动 Parallel keyed shaft DIN 6885 limited suitability for through drive			●	–	–	–	–	P

安装法兰 Mounting flange

09	ISO 3019-2（ISO）	2 孔 2-hole	●	–	–	–	–	A
	ISO 3019-1 (SAE)	2 孔 2-hole	●	●	●	●	●	C
		4 孔 4-hole	–	–	–	●	–	D

工作油口 Working port

10	SAE 法兰油口,公制紧固螺纹 SAE flange port fastening thread, metric	后部	rear	不用于通轴驱动 not for through drive	–	●	●	●	●	11
		对侧侧面	at side, opposite	适用于通轴驱动 for through drive	–	●	●	●	●	12
		侧面，90°偏置	at side, offset 90°	不用于通轴驱动，仅适用于逆时针旋转 not for through drive; available only for counter-clockwise direction of rotation	–	–	●	–	–	13
	公制螺纹油口 Threaded port, metric	后部 rear		不用于通轴驱动 not for through drive	●	–	–	–	–	14

通轴驱动 Through drive

11	无通轴驱动 without through drive	●	●	●	●	●	N00

电磁铁插头Connector for solenoids

12	无插头（无电磁铁，只有液压控制；无代码） Without connector (without solenoid, with hydraulic control only, without code)	●	●	●	●	●	
	DEUTSCH - 2 针注塑插头 – 不带镇流器二极管（用于电气控制） DEUTSCH – molded connector, 2-pin – without suppressor diode (for electric controls)	–	●	●	●	●	P

● = 可供货　○ = 根据要求供货　– = 不可供货　● = Available　○ = On request　– = Not available

LA10V0 轴向柱塞变量泵
Axial piston variable pump

系列 53 的订货代码 Ordering code series 53

01	02	03	04	05	06	07	08	09	10	11	12
LA10V	O			/	53		–	V			

轴向柱塞元件 Axial piston unit

		18	28	45	63	72	85	100	
01	斜盘设计、变量泵、公称压力 250 bar、最大压力 315 bar Swashplate design, variable, nominal pressure 250 bar, maximum pressure 315 bar	●	●	●	●	●	●	●	LA10V

运行模式 Operation mode

02	泵，开式回路 Pump, open circuit	O

规格（NG）Size (NG)

		18	28	45	63	72	85	100
03	几何排量，见第113页的数据表 Geometric displacement, see table of values on page 113	18	28	45	63	72	85	100

控制设备 Control devices

04	压力控制 Pressure control	液压 hydraulic				●	●	●	●	●	●	●	DR
	带流量控制器 with flow controller	液压 hydraulic	X-T 开启 X-T open			●	●	●	●	●	●	●	DRF
			X-T 堵住 X-T plugged	带冲洗功能 with flushing function		●	●	●	●	●	●	●	DRS
				无冲洗功能 without flushin function		●	●	●	●	●	●	●	DRSC
	带压力切断 with pressure cut-off	液压 hydraulic	远程控制 remotely operated			●	●	●	●	●	●	●	DRG
		电气 electric	负控制 negative control		U = 12 V	●	●	●	●	●	●	●	ED71
					U = 24 V	●	●	●	●	●	●	●	ED72
		电气 electric	正控制 positive control		U = 12 V	●	●	●	●	●	●	●	ER71
					U = 24 V	●	●	●	●	●	●	●	ER72
	压差控制 Differential pressure control		电控制（负控制）electric control (negative control)			○	○	○	○	○	●	●	EF..[1]
	带有压力切断的功率控制 Power control with pressure cut-off	液压 hydraulic	控制初始值 start of control	自 from	10 to 35 bar	●	●	●	●	●	●	●	LA5D
					36 to 70 bar	●	●	●	●	●	●	●	LA6D
					71 to 105 bar	●	●	●	●	●	●	●	LA7D
					106 to 140 bar	●	●	●	●	●	●	●	LA8D
					141 to 230 bar	●	●	●	●	●	●	●	LA9D
	远程控制 remotely operated	液压 hydraulic	控制初始值 start of control	参见 LA.D see LA.D		●	●	●	●	●	●	●	LA.DG
	流量控制，X-T 堵住 flow control, X-T plugged	液压 hydraulic	控制初始值 start of control	参见 LA.D see LA.D		●	●	●	●	●	●	●	LA.DS
		可电覆盖（负控制）electrically overridable (negative control)	控制初始值 start of control	参见 LA D see LA.D		●	●	●	●	●	●	●	LA.S

系列 Series

05	系列 5，索引 3 Series 5, index 3	●	●	●	●	●	●	●	53

旋转方向 Direction of rotation

06	从传动轴上看 View on drive shaft	顺时针 clockwise	R
		逆时针 counter-clockwise	L

LA10V0 轴向柱塞变量泵
Axial piston variable pump

密封材料 Sealing material

07	FKM（氟橡胶）FKM (fluor-caoutchouc)	V

传动轴

08	花键轴 Splined shaft	标准轴 standard shaft	●	●	●	●	●	●	●	S
	ANSI B92.1a	类似于轴“S”，但适合更高的输入扭矩 similar to shaft "S" however for higher input torque	●	●	●	●	●	●	–	R
		缩小的直径，有限适用于通轴驱动 reduced diameter, limited suitability for through drive	●	●	●	●	●	●	●	U
		类似于轴“U”，但适合更高的扭矩 similar to shaft "U", however for higher torque	–	●	●	●	●	●	●	W

安装法兰 Mounting flange

09	ISO 3019-1 (SAE)	2 孔 2-hole	●	●	●	●	●	●	●	C
		4 孔 4-hole	–	–	–	●	●	●	●	D

工作油口 Working port

10	SAE 法兰油口，公制紧固螺纹	后部 rear	不用于通轴驱动 not for through drive	●	●	●	●	●	●	●	11
	SAE flange port fastening thread, metric	对侧侧面 at side, opposite	适用于通轴驱动 for through drive	●	●	●	●	●	●	●	12
		侧面，90°偏置 at side, offset 90°	不用于通轴传动；仅适用于逆时针旋转 not for through drive; available only for counter-clockwise direction of rotation	–	–	●	–	–	–	–	13

01	02	03	04	05	06	07	08	09	10	11	12
LA10V	O			/	53		–	V			

通轴驱动 Through drive

		18	28	45	63	72	85	100	
11	无通轴驱动 without through drive	●	●	●	●	●	●	●	N00

电磁铁插头 Connector for solenoids

12	无插头（无电磁铁，只有液压控制；无代码） Without connector (without solenoid, with hydraulic control only, without code)	●	●	●	●	●	●	●	
	DEUTSCH - 2 针注塑插头 – 不带镇流器二极管（用于电气控制） DEUTSCH – molded connector, 2-pin – without suppressor diode (for electric controls)	●	●	●	●	●	●	●	P

● = 可供货　○ = 根据要求供货　– = 不可供货

● = Available　○ = On request　– = Not available

LA10VO 轴向柱塞变量泵
Axial piston variable pump

工作压力范围 Operating pressure range

工作油口 B 处的压力 Pressure at working port B		定义 Definition
公称压力 $p_{公称}$ Nominal pressure p_{nom}	250 bar 绝对压力 250 bar absolute	公称压力与最大设计压力相对应。 The nominal pressure corresponds to the maximum design pressure.
最大压力 p_{max} Maximum pressure p_{max}	315 bar 绝对压力 315 bar absolute	最大压力与单次工作时间内的最大工作压力相对应。各单次工作时间的总和不得超过总工作时间。 The maximum pressure corresponds the maximum working pressure within the single operating period. The sum of the single operating periods must not exceed the total operating period.
单次工作时间 Single operating period	2.5 ms	
总工作时间 Total operating period	300 小时 300 h	
最小压力 $p_{B\ 绝对}$ (高压侧) Minimum pressure $p_{B\ abs}$ (high pressure side)	10 bar 绝对压力 10 bar absolute	防止损坏轴向柱塞单元所需的高压侧最小压力 (B)。 Minimum pressure on the high-pressure side (**B**) which is required in order to prevent damage to the axial piston unit.
压力变化速率 $R_{A\ max}$ Rate of pressure change $R_{A\ max}$	16000 bar/s	在整个压力范围内压力变化时的最大允许升压/减压速率。 Maximum permissible rate of pressure rise and reduction during a pressure change over the entire pressure range.
吸油口 S (入口) 压力 Pressure at suction port S (inlet)		
最小压力 $p_{S\ min}$ Minimum pressure $p_{S\ min}$ 标准 Standard	0.8 bar 绝对压力 0.8 bar absolute	防止损坏轴向柱塞单元所需的吸油口 S (入口) 处的最小压力。最小压力取决于轴向柱塞单元的转速和排量。 Minimum pressure at suction port **S** (inlet) that is required in order to avoid damage to the axial piston unit. The minimum pressure depends on the speed and displacement of the axial piston unit.
最大压力 $p_{S\ max}$ Maximum pressure $p_{S\ max}$	5 bar 绝对压力 5 bar absolute	
油口 L_1、L_2 处的壳体泄油压力 Case drain pressure at port L_1, L_2		
最大压力 $p_{L\ max}$ Maximum pressure $p_{L\ max}$	2 bar 绝对压力 2 bar absolute	最多比油口 S 的入口压力高 0.5 bar，但不高于 $p_{L\ max}$需要一条通向油箱的壳体泄油管路。 Maximum 0.5 bar higher than inlet pressure at port **S**, but not higher than $p_{L\ max}$. A case drain line to the reservoir is re uired.

▼ **压力变化速率 Rate of pressure change $R_{A\ max}$**

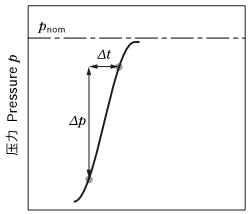

▼ **压力定义 Pressure definition**

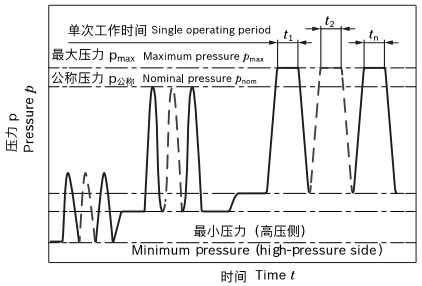

▼ **最大允许转速（转速限制）**
增加吸油口 **S** 的入口压力 p_{abs} 或在 $V_g \le V_{gmax}$ 时的允许转速

▼ **Maximum permissible speed (limit speed)**
Permissible speed by increasing inlet pressure p_{abs} at suction opening **S** or at $V_g \le V_{gmax}$

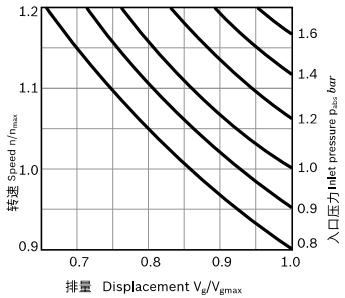

总工作时间 = $t_1 + t_2 + ... + t_n$

Total operating period = $t_1 + t_2 + ... + t_n$

注意
该工作压力范围适用于使用基于矿物油的液压油的工况。
有关其他液压油的数值，请联系我们。

Note
Operating pressure range valid when using hydraulic fluids based on mineral oils. Please contact us for values for other hydraulic fluids.

LA10VO 轴向柱塞变量泵
Axial piston variable pump

技术参数 Technical data

规格 Size		NG		10	18	28	45	60 1)	63 2)	72	85	100
几何排量（每转）Displacement, geometric, per revolution	$V_{g\ max}$	cm^3		10.5	18	28	45	60	63	72	85	100
最高转速3) Speed maximum3)	at $V_{g\ max}$	$n_{公称}$	rpm	3600	3300	3000	2600 4)	2700	2600	2600	2500	2300
	at $V_g < V_{g\ max}$	$n_{最大允许}$	rpm	4320	3960	3600	3120	3140	3140	3140	3000	2500
流量 Flow	at n_{nom} and $V_{g\ max}$	q_v	l/min	37	59	84	117	162	163	187	212	230
	at n_E = 1500 rpm	q_{vE}	l/min	15	27	42	68	90	95	108	128	150
功率 Power	at n_{nom}, $V_{g\ max}$ and Δp = 250 bar	P	kW	16	25	35	49	65	68	77	89	96
	at n_E = 1500 rpm	P_E	kW	7	11	18	28	37	39	45	53	62
扭矩 Torque	at $V_{g\ max}$ and Δp = 250 bar	T	Nm	42	71	111	179	238	250	286	338	398
	at $V_{g\ max}$ and Δp = 100 bar	T	Nm	17	29	45	72	95	100	114	135	159
传动轴旋转刚度 Rotary stiffness of drive shaft	S	c	Nm/rad	9200	11000	22300	37500	65500	65500	65500	143000	143000
	R	c	Nm/rad	–	14800	26300	41000	69400	69400	69400	152900	–
	U	c	Nm/rad	6800	8000	16700	30000	49200	49200	49200	102900	102900
	W	c	Nm/rad	–	–	19900	34400	54000	54000	54000	117900	117900
	P	c	Nm/rad	10700	–	–	–	–	–	–	–	–
旋转总成转动惯量 Moment of inertia for rotary group	J_{TW}	kgm^2		0.0006	0.0009	0.0017	0.003	0.0056	0.0056	0.0056	0.012	0.012
最大角加速度5) Maximum angular acceleration5)	α	rad/s^2		8000	6800	5500	4000	3300	3300	3300	2700	2700
壳体体积 Case volume	V	l		0.2	0.25	0.3	0.5	0.8	0.8	0.8	1	1
重量（不含通轴驱动，近似值）Weight without through drive (approx.)	m	kg		8	11 5	15	18	22	22	22	36	36
重量（含通轴驱动，近似值）Weight with through drive (approx.)				–	13	18	24	28	28	28	45	45

决定操作特性 Determining the operating characteristics

流量 Flow $q_v = \frac{V_g \times n \times \eta_v}{1000}$ [l/min]

扭矩 Torque $T = \frac{V_g \times \Delta p}{20 \times \pi \times \eta_{hm}}$ [Nm]

功率 Power $P = \frac{2\pi \times T \times n}{60000} = \frac{q_v \times \Delta p}{600 \times \eta_t}$ [kW]

关键参数

V_g	每转排量 [cm^3]
Δp	压差 [bar]
n	转速 [rpm]
η_v	容积效率
η_{hm}	机械-液压效率
η_t	总效率 ($\eta_t = \eta_v \times \eta_{hm}$)

Key

V_g	Displacement per revolution [cm^3]
Δp	Differential pressure [bar]
n	Rotational speed [rpm]
η_v	Volumetric efficiency
η_{hm}	Mechanical-hydraulic efficiency
η_t	Total efficiency ($\eta_t = \eta_v \times \eta_{hm}$)

注意
- 理论值，不包括效率值和公差；近似值
- 操作时，超过最大值或低于最小值均可能导致功能丧失、使用寿命缩短或轴向柱塞单元损坏。力盛 建议通 过实验或计算/模拟等方式进行负荷测试，并将其与允许值进行比较。

Note
- Theoretical values, without efficiency and tolerances; values rounded
- Operation above the maximum values or below the minimum values may result in a loss of function, a reduced service life or in the destruction of the axial piston unit. Lixon recommends testing the load by means of experiment or calculation / simulation and comparison with the permissible values.

1) 仅系列 52
2) 仅系列 53
3) 这些值适用于：
– 在吸油口 S 处的绝对压力 p绝对 = 1 bar 时
–最佳粘度范围为 v最佳 = 36 至 16 mm2/s
– 矿物油基液压油
4) 有关更高速度，请联系我们
5) 应用范围在必要的最小传动速度和最大允许传动速度之间。外部激励有效（例如：发动机速率是旋转频率的 2 至 8 倍；万向轴速率是旋转频率的 2 倍）。极限值仅适用于单级泵。必须考虑连接件的负载能力。

1) Only series 52
2) Only series 53
3) The values are applicable:
At absolute pressure pabs = 1 bar at suction port S
For the optimal viscosity range of vopt = 36 to 16 mm2/s
For hydraulic fluid based on mineral oils
4) Please contact us regarding higher speeds
5) The scope of application lies between the minimum necessary and the maximum permissible drive speeds. It applies for external stimuli (e. g. engine 2 to 8 times rotary frequency, Cardan shaft twice the rotary frequency). The limit value is only valid for a single pump.
The load capacity of the connecting parts must be considered.

DR – 压力控制 DR – Pressure control

压力控制器将泵出口的最大压力限制在变量泵的控制范围内。变量泵仅提供执行器所需的液压油量。如果工作压力超过压力阀处设置的压力设定值，则泵将调节至更小的排量以减少控制偏差。

The pressure controller limits the maximum pressure at the pump outlet within the control range of the variable pump. The variable pump only supplies as much hydraulic fluid as is required by the consumers. If the operating pressure exceeds the pressure setting at the pressure valve, the pump will regulate to a smaller displacement to reduce the control differential.

- 卸压状态下的基本位置：$V_{g\,max}$。
- 压力控制的设置范围 1) 为 35 至 250 bar。
  标准设置为 250 bar。

- Basic position in depressurized state: $V_{g\,max}$.
- Setting range1) for pressure control 35 to 250 bar.
  Standard is 250 bar.

▼ DR 特性曲线 Characteristic curve DR

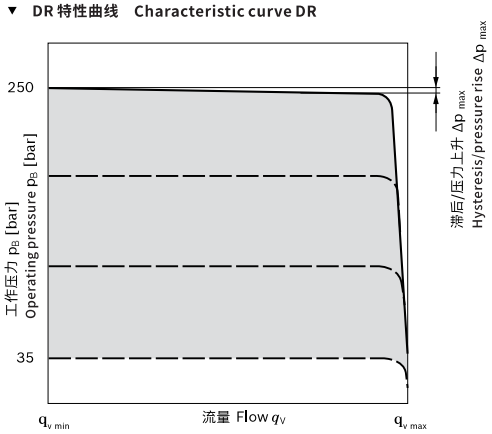

▼ DR 油路图 Circuit diagram DR

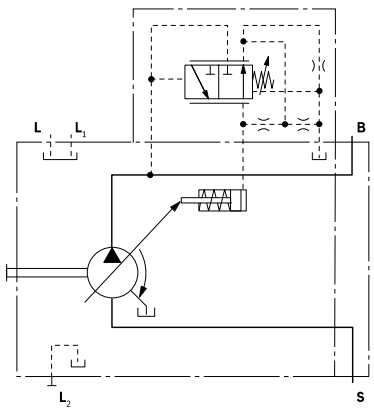

特性曲线在 n_1 = 1500 rpm 和 t_{fluid} = 50 °C 时有效。

控制器数据 Controller data

规格 Size		10	18	28	45	60 63	72	85	100
压力增量 Pressure increase	Δp [bar]	6	6	6	6	8	8	12	14
滞后和重复 Hysteresis and repeat-ability	Δp [bar]	最大为 3 maximum 3							
控制液压油消耗 Control fluid consumption	l/min	最大约为 3 maximum approx. 3							

DRG – 远程压力控制 DRG – Pressure control, remotely operated

对于远程压力控制，可以使用一个单独布置的溢流阀来设置目标压力。因此，可以调节压力控制器设定压力以下的任何压力控制值溢流阀可以通过外接管路连接至油口 X，从而在 DR 控制阀芯的设置下实现远程压力设置。该溢流阀不包含在 DRG 控制装置的供货范围之内。
当控制阀处具有压差Δp，且遥控压力切断的标准设置为20 bar 时，油口 X 连接处控制液压油的流量约为 1.5 l/min。
如果需要其它设置（范围在 10 - 22 bar 之间），请以明文形式注明。
对于独立的压力溢流阀 (1)，我们推荐：
▶直接控制的液压或电动比例阀，适合于控制上述液压油。
管路最长不得超过 2 m。
▶ 卸压状态下的基本位置：$V_{g\,max}$。
▶ 压力控制的设置范围1) 为 35 至 250 bar (3)。
标准设置为 250 bar。
▶ 压差设置范围为 10 至 22 bar (2)
标准设置为 20 bar。
将油口 X 上的负载释放至油箱产生零行程（备用）压力，它比规定压差Δp 高大约 1 至 2 bar。但系统影响未被考虑在内。

The remote-controlled pressure control, the LS pressure limitation is performed using a separately arranged pressure relief valve. Therefore any pressure control value under the pressure set on the pressure controller can be regulated.
Pressure controller DR see page 114.
A pressure relief valve is externally piped to port X for remote setting of pressure below the setting of the DR control valve spool. This relief valve is not included in the scope of delivery of the DRG control.
When there is differential pressure Δp at the control valve and with the standard setting on the remote-controlled pressure cut-off of 20 bar, the amount of control fluid at the connection is X approx. 1.5 l/min. If a different setting (range 10 to 22 bar) is required, please state in plain text.
As a separate pressure relief valve (1) we recommend:
▶a directly controlled, hydraulic or electric proportional one, suitable for the control fluid mentioned above.
The max. length of piping should not exceed 2 m.
▶Basic position in depressurized state: $V_{g\,max}$.
▶Setting range1) for pressure control 35 to 250 bar (3).
Standard is 250 bar.
▶Setting range for differential pressure 10 to 22 bar (2)
Standard is 20 bar.
Unloading port X to the reservoir results in a zero stroke (standby) pressure which is approx. 1 to 2 bar higher than the defined differential pressure Δp, however system influences are not taken into account.

▼ DRG 特性曲线 Characteristic curve DRG

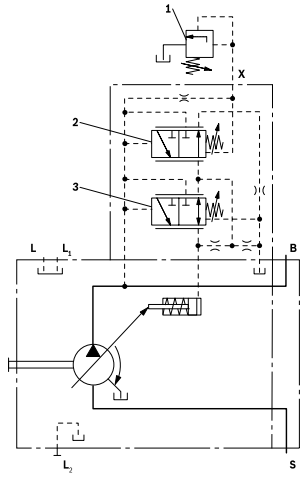

1 独立的压力溢流阀和管路不在供货范围内。
2 远程控制压力切断 (G)。
3 压力控制器 (DR)

1 The separate pressure relief valve and the line are not included in the scope of delivery.
2 Remote-controlled pressure cut-off (G).
3 Pressure controller (DR)

▼ DR 油路图 Circuit diagram DR

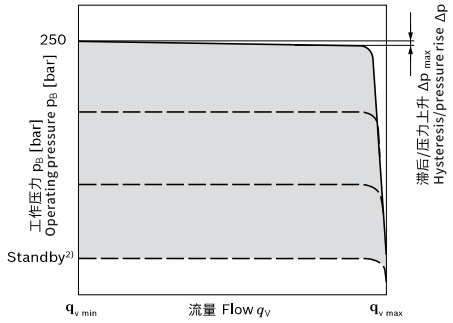

特性曲线在 n_1 = 1500 rpm 和 t_{fluid} = 50 °C 时有效。
Characteristic curve valid for n_1 = 1500 rpm and t_{fluid} = 50 °C.

控制器数据 Controller data

规格 Size		10	18	28	45	60 63	72	85	100
压力增量 Pressure increase	Δp [bar]	6	6	6	6	8	8	12	14
滞后和重复 Hysteresis and repeatability	Δp [bar]	最大为 3 maximum 3							
控制液压油消耗 Control fluid consumption	l/min	最大约为 4.5 maximum approx. 4.5							

LA10V0 轴向柱塞变量泵
Axial piston variable pump

DRF (DFR) / DRS (DFR1) / DRSC– 压力和流量控制

除了压力控制功能，可使用可变节流孔（例如方向阀）来调节节流孔上游和下游压差。这用于控制泵流量。泵流量等于执行器实际需要的液压油流量。对于所有控制器组合，V_g 下降具有优先性。

▶ 卸压状态下的基本位置：$V_{g\,max}$。

▶ 设置范围至 250 bar。

▶ D R 压力控制器数据，请参见第 114 页。

▼ **DRF（DFR）/ DRS（DFR1）/ DRSC 特性曲线**
Characteristic curve DRF (DFR) / DRS (DFR1) / DRSC

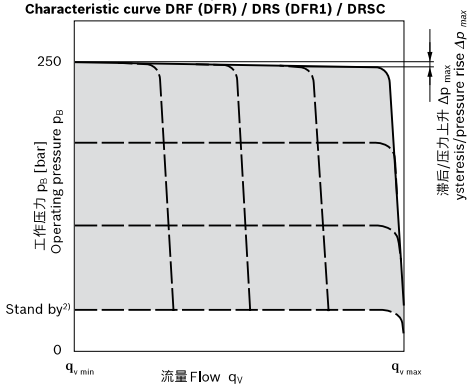

▼ **变速条件下的特性曲线**
Characteristic curve at variable speed

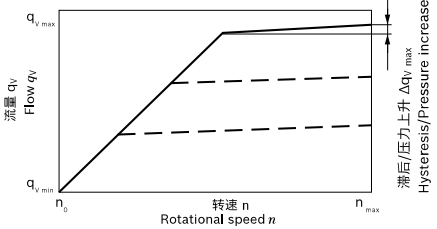

特性曲线在 n_1 = 1500 rpm 和 t_{fluid} = 50 °C 时有效。
Characteristic curves valid for n_1 = 1500 rpm and t_{fluid} = 50 °C.

油口 **B**
处可能的连接（不包括在供货范围内）
Possible connections at port **B**
(not included in the delivery contents)

LS 行走机械控制块 LS mobile control blocks	数据表 Data sheets
M4-12	64276
M4-15	64283
LUDV 行走机械控制块 LUDV mobile control blocks	
M6-15	64284
M7-22	64295

DRG – Pressure control, remotely operated

In addition to the pressure controller function , a variable orifice (e.g. directional valve) is usedto adjust the differential pressure upstream and downstream of the orifice. This is used to control the pump flow.
The pump flow is equal to the actual hydraulic fluid quantity required by the consumer. With all controller combinations,the Vg reduction has priority.

▶ Basic position in depressurized state:$V_{g\,max}$.

▶ Setting range to 250 bar.

▶ DR pressure controller data see page 114 e Δp, however system influences are not taken into account.

▼ **DRF (DFR) 油路图 Circuit diagram DRF (DFR)**
在 DRS（DFR1）/ DRSC 阀处堵上
Plugged at DRS (DFR1) / DRSC valve

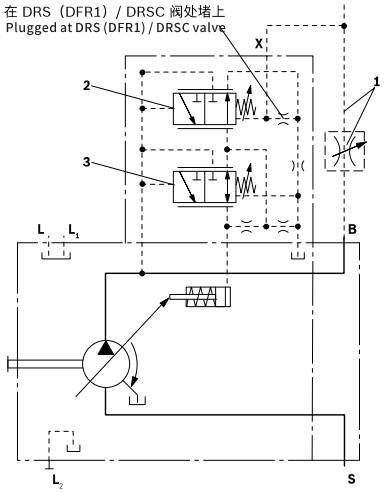

1 测量孔板（控制块）和管路不在供货范围内。
2 压力和流量控制器 (FR)。
3 压力控制器 (DR)

1 The metering orifice (control block) and the line is not included in the delivery contents.
2 Pressure and flow controller (FR).
3 Pressure controller (DR)

压差 Δp：
▶ 标准设置：14 bar
如果需要另一设置，请以明文形式注明。
▶ 调节范围：14 至 22 bar
将油口 X 上的负载释放至油箱产生零行程（备用）压力，它比规定压差 Δp 高大约 1 至 2 bar。但系统影响未被考虑在内。

Differential pressure Δp:
▶ Standard setting: 14 bar
If another setting is required, please state in clear text.
▶ Adjustment range: 14 to 22 bar
Unloading port X to the reservoir results in a zero stroke (standby) pressure which is approx. 1 to 2 bar higher than the defined differential pressure Δp, however system influences are not taken into account.

NVICKS® 威克斯液压 VICKS HYDRAULIC

LA10V0 轴向柱塞变量泵
Axial piston variable pump

控制器数据
▶ DR 压力控制器数据，请参见第 114 页。
▶ 最大流量偏差按照传动转速为 n = 1500 rpm 进行测量。

Controller data
▶ DR pressure controller data see page 114 .
▶Maximum flow deviation measured at drive speed n = 1500 rpm.

规格			10	18	28	45	60 63	72	85	100
流量偏差	Flow deviation	Δq_{vmax} [l/min]	0.5	0.9	1.0	1.8	2.5	2.5	3.1	3.1
滞后和重复	Hysteresis repeatability	Δp [bar]	最大为 3 maximum 3							
控制液压油消耗	Control fluid consumption	l/min	最大值约为 3 至 4.5 (DRF (DFR)) maximum approx. 3 to 4.5 (DRF (DFR)) 最大值约为 3 (DRS (DFR1) / DRSC) maximum approx. 3 (DRS (DFR1) / DRSC)							

LA10V0 轴向柱塞变量泵
Axial piston variable pump

LA...– 压力流量和功率控制器

采用 DR(G) 配备的压力控制，参见第 114(115) 页。
DRS(DFR1) 等流量控制的配备，参见第116页。
为了在工作压力不断变化的情况下保持恒定的传动扭矩，需要改变摆动角及相应的轴向柱塞泵流量，以使流出的流量和压力保持不变。流量控制可能低于功率控制曲线。订购时，请用明文说明工厂交货时要设置的功率特性，例如在 1500 rpm 时 20 kW。

LA... – Pressure, flow and power controller

Pressure control equipped as DR(G), see page 114(115).
Equipment of the flow control like DRS (DFR1), see page 116.
In order to achieve a constant drive torque with varying operating pressures, the swivel angle and with it the volume flow from the axial piston pump is varied so that the product of flow and pressure remains constant. Flow controller is possible below the power control curve. When ordering please state the power characteristics to be set ex works in clear text, e.g. 20 kW at 1500 rpm.

控制器数据

▶DR 压力控制器，请参见第114页。
▶DR 压力和流量控制器，请参见第116页。
▶电子越权控制 LA.S
▶ 控制液压油消耗最大约 5.5 l/min

Controller data

▶ Pressure controller DR see page 114.
▶ Pressure and flow controller DR see page 116.
▶See data sheet 92709 for electric override LA.S
▶Control fluid consumption max. approx. 5.5 l/min

控制初始值 Start of control	相应规格的扭矩 T [Nm] Torque T [Nm] for size 18	28	45	63	72	85	100	订货代码
10 to 35 bar	3.8 – 12.1	6 – 19	10 – 30	15 – 43	17 – 49.2	20 – 57	24 – 68	**LA5**
	12.2 – 23.3	19.1 – 36	30.1 – 59	43.1 – 83	49.3 – 94.9	57.1 – 112	68.1 – 132	**LA6**
71 to 105	23.4 – 33.7	36.1 – 52	59.1 – 84	83.1 – 119	95.0 – 136.0	112.1 – 160	132.1 – 189	**LA7**
106 to 140	33.8 – 45	52.1 – 70	84.1 – 112	119.1 – 157	136.1 – 179.4	160.1 – 212	189.1 – 249	**LA8**
141 to 230	45.1 – 74.8	70.1 – 117	112.1 – 189	157.1 – 264	179.5 – 301.7	212.1 – 357	249.1 – 419	**LA9**

以功率表示的扭矩值转换 Conversion of the torque values in power [kW]

$$P = \frac{T}{6.4}\ [kW] \quad \text{(at 1500 rpm)} \quad \text{OR} \quad P = \frac{2 \times T \times n}{60000}\ [kW]$$

▼ **LA·DS 特性曲线** Characteristic curve LA.DS

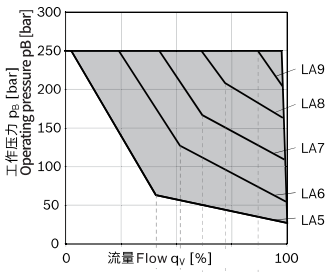

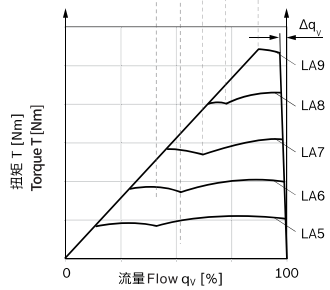

▼ **LA·DS 油路图** Circuit diagram LA.DS

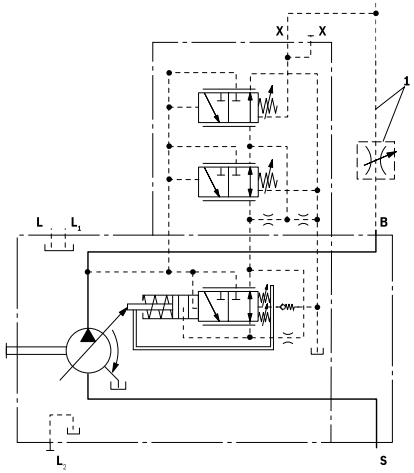

1 测量孔板（控制块）和管路不在供货范围内。
The metering orifice (control block) and the line is not included in the delivery contents.

LA10V0 轴向柱塞变量泵
Axial piston variable pump

LA...– 型号
LA... –Variations

▼ **压力切断时的 LA.D** 油路图
Circuit diagram LA.D with pressure cut-off

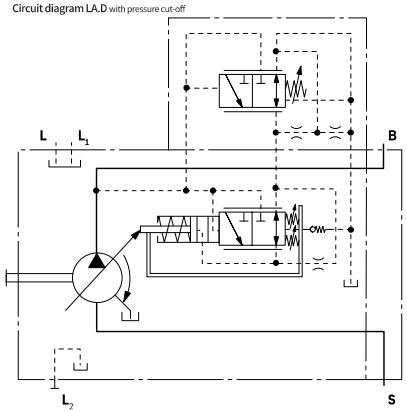

▼ **远程控制压力切断时的 LA.DG** 油路图
Circuit diagram LA.DG with pressure cut-off, remotely operated

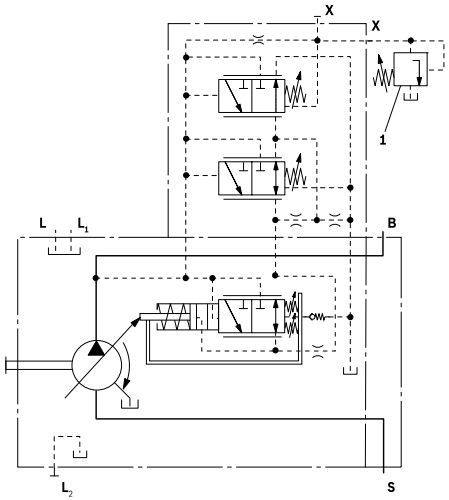

1 独立的压力溢流阀和管路不在供货范围内。
The pressure relief valve and the line are not included in the scope of delivery.

▼ **单独流量控制时的 LA.S** 示意图
Circuit diagram LA.S with separate flow control

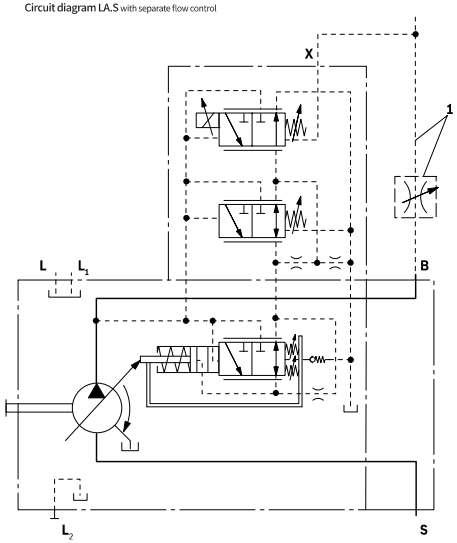

1 测量孔板（控制块）和管路不在供货范围内。
The sensing orifice (control block) and the line is not included in the delivery contents.

控制器数据
▶ 电子越权控制 LA.S

Controller data
▶See data sheet 92709 for electric override LA.S

LA10V0 轴向柱塞变量泵
Axial piston variable pump

ED – 电液压力控制

ED 阀通过规定的可变线圈电流设置为一定压力。
改变执行器时(负载压力),泵摆动角 (流量) 增加或降低的原因是为了保持电动调定压力等级。
因此,泵只能输送执行器可以接受的液压油量。通过改变电磁铁电流,可以无级调节所需压力等级。
当电磁铁电流信号降至零值时,通过可调液压切断装置(在失去动力的情况下确保故障安全功能,例如用于风扇驱动)将压力限制为 pmax。ED 控制的响应时间特性曲线经过优化,可用作风扇驱动系统。订购时,请以明文形式注明应用类型。

ED – Electro-hydraulic pressure control

The ED valve is set to a certain pressure by a specified variable solenoid current.
When changing the consumer (load pressure), this causes an increase or decrease in the pump swivel angle (flow) in order to maintain the electrically set pressure level.
The pump thus only delivers as much hydraulic fluid as the consumers can take. The desired pressure level can be set steplessly by varying the solenoid current.
As the solenoid current signal drops towards zero, the pressure will be limited to pmax by an adjustable hydraulic pressure cut-off (secure fail safe function in case of a loss of power, e.g. for fan drives). The response time characteristic curve of the ED-control was optimized for the use as a fan drive system. When ordering, specify the type of application in clear text.

▼ 流量压力特性曲线
Flow-pressure characteristic curve

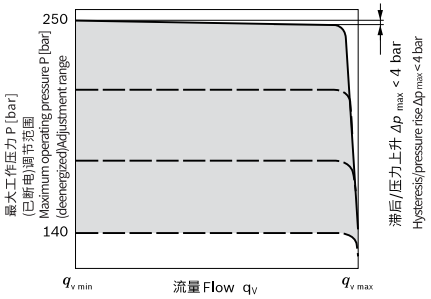

▶ 特性曲线在 n1 = 1500 rpm 和 tfluid = 50 °C 时有效。
▶ 控制液压油消耗:3 至 4.5 l/min。
▶ 关于备用标准设置 (参见以下图表),其它数值可根据要求提供。

▶ Characteristic curves valid for n1 = 1500 rpm and t_{fluid} = 50° C.
▶ Control fluid consumption: 3 to 4.5 l/min.
▶ For standby standard setting, see the following diagram, other values on request.

▼ 静态电流压力特性曲线 ED(在泵处于零行程时测量的负特性曲线)
Static current-pressure characteristic curve ED
(negative characteristic curve measured with pump in zero stroke)

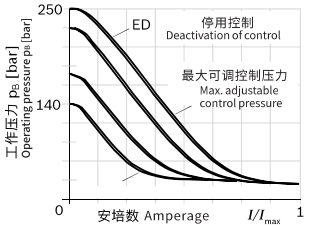

▶ 静态迟滞 < 3 bar。
Hysteresis static < 3 bar.

▼ 压力设置对备用模式的影响(最大通电状态)
Influence of the pressure setting on standby
(maximally energized)

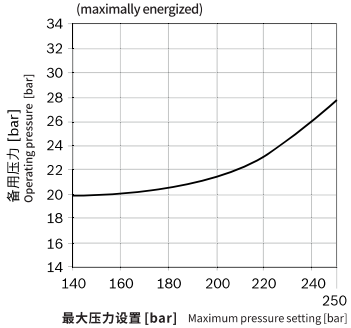

▼ ED71/ED72 油路图
Circuit diagram ED71/ED72

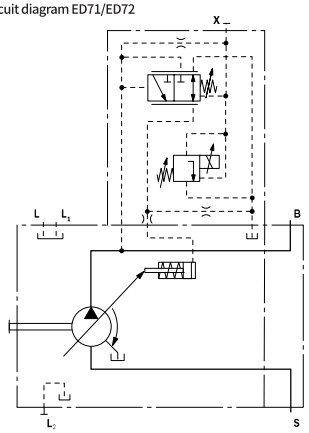

LA10V0 轴向柱塞变量泵
Axial piston variable pump

电磁铁技术数据	Technical data, solenoid	ED71	ED72
电压	Voltage	12 V (±20%)	24 V (±20%)
控制电流	Control current		
在 P_{max} 时的控制初始值	Start of control at P_{max}	100 mA	50 mA
在 P_{min} 时的控制终止值	End of control at P_{min}	1200 mA	600 mA
限制电流	Limiting current	1.54 A	0.77 A
公称电阻(20 °C 时)	Nominal resistance (at 20 °C)	5.5 Ω	22.7 Ω
抖频	Dither frequency	100-200 Hz	100-200 Hz
启动时间	Duty cycle	100%	100%
阀门工作温度范围 -20 °C 至 +115 °C	Operating temperature range at valve -20 °Cto +115 °C		

ER – 电液压力控制

ER 阀通过规定的可变线圈电流设置为一定压力。
改变执行器时(负载压力),泵摆动角 (流量) 增加或降低的原因是为了保持电动调定压力等级。
因此,泵只能输送执行器可以接受的液压油量。通过改变电磁铁电流,可以无级调节所需压力等级。
当线圈电流信号朝向零下降时,压力将被限制为 pmin (备用)。
请遵守项目规划注意事项

ER – Electro-hydraulic pressure control

The ER valve is set to a certain pressure by a specifiedvariable solenoid current.
When changing the consumer (load pressure), this causes an increase or decrease in the pump swivel angle (flow) in order to maintain the electrically set pressure level.
The pump thus only delivers as much hydraulic fluid as the consumers can take. The desired pressure level can be set steplessly by varying the solenoid current.
As the solenoid current signal drops towards zero, thepressure will be limited to pmin (stand by).
Observe project planning notes.

▼ 流量压力特性曲线
Flow-pressure characteristic curve

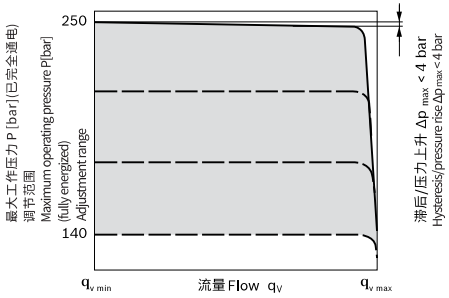

▶特性曲线在 n1 = 1500 rpm 和 t_{fluid} = 50 °C 时有效。
▶控制液压油消耗:3 至 4.5 l/min。
▶备用标准 14 bar。其他数值根据要求提供。
▶压力设置对备用模式的影响 ±2 bar

▶Characteristic curves valid for n1 = 1500 rpm and t_{fluid} = 50° C.
▶Control fluid consumption: 3 to 4.5 l/min.
▶Standby standard 14 bar. Other values on request.
▶Influence of pressure setting on stand-by ±2 bar.

▼ 静态电流压力特性曲线 ER(在泵处于零行程时测量的正特性曲线)
Static current-pressure characteristic curve ER
(positive characteristic curve measured with pump in zero stroke)

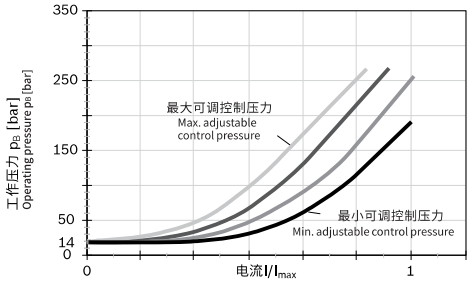

▶ 静态电流压力特性曲线的迟滞 < 3 bar。
Hysteresis static current-pressure characteristic curve < 3 bar.

LA10V0 轴向柱塞变量泵
Axial piston variable pump

▼ ER71/ER72 油路图
Circuit diagram ER71/ER72

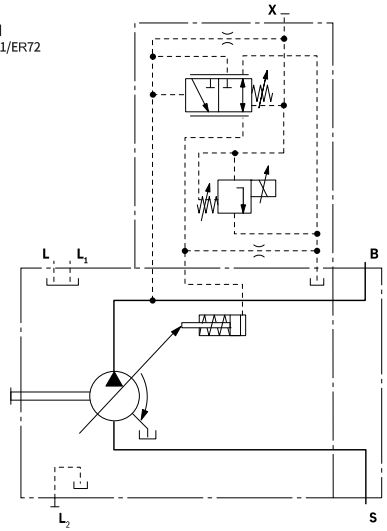

电磁铁技术数据	Technical data, solenoid	ED71	ED72
电压	Voltage	12 V (±20%)	24 V (±20%)
控制电流	Control current		
在 P_{min} 时的控制初始值	Start of control at P_{min}	100 mA	50 mA
在 P_{max} 时的控制终止值	End of control at P_{max}	1200 mA	600 mA
限制电流	Limiting current	1.54 A	0.77 A
公称电阻(20 °C 时)	Nominal resistance (at 20 °C)	5.5 Ω	22.7 Ω
抖频	Dither frequency	100-200 Hz	100-200 Hz
启动时间	Duty cycle	100%	100%
阀门工作温度范围 -20 °C 至 +115 °C	Operating temperature range at valve -20 °Cto +115 °C		

项目规划注意事项!

流向 ER 电磁铁的过高电流强度(12 V 时 I > 1200 mA 或 24 V 时 I > 600 mA)可能导致压力意外增大,从而导致泵或系统损坏。因此:

▶ 使用 I_{max} 限流线圈。

▶ 在溢流的情况下,叠加阀板减压阀可用于保护此泵。可以通过力盛订购带中间板压力控制器的附件套件。

Project planning note!

Excessive current levels (I > 1200 mA at 12 V or I > 600 mA at 24 V) to the ER solenoid can result in undesired pressure increases which can lead to pump or system damage. Therefore:

▶Use I_{max} current limiter solenoids.

▶A sandwich plate pressure reducing valve can be used to protect the pump in the event of overflow.
An accessory kit with intermediate plate pressure controller can be ordered from Lixon under part number R902490825.

NVICKS® 威克斯液压 VICKS HYDRAULIC

LA10V0 轴向柱塞变量泵
Axial piston variable pump

规格尺寸 10 Dimensions size 10

DR – 压力控制器;SAE C 型安装法兰;系列 52
DR – Pressure controller; mounting flange C version SAE; series 52

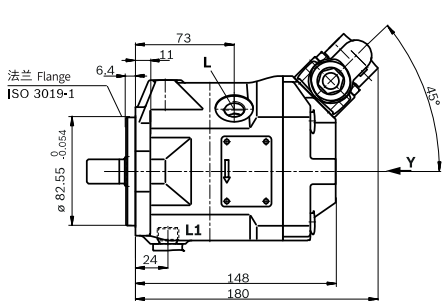

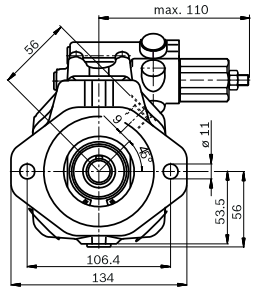

▼Y 视图
适合顺时针旋转的阀安装
View Y
Valve mounting for clockwise rotation

▼Y 视图
适合逆时针旋转的阀安装
View Y
Valve mounting for counter-clockwise rotation

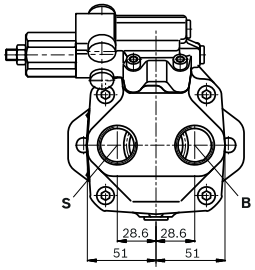

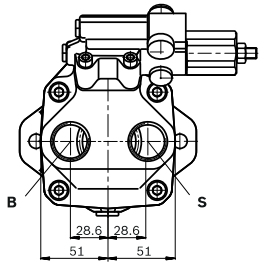

▼ 花键轴 3/4 英寸 (SAE J744)
Splined shaft 3/4 in (SAE J744)
S – 11T 16/32DP[1)]

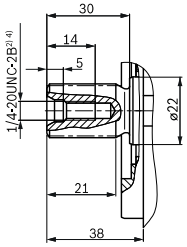

▼ 花键轴 5/8 英寸 (SAE J744)
Splined shaft 5/8in (SAE J744)
U – 9T 16/32DP[1)]

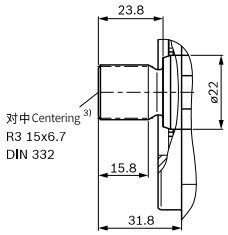

▼ 符合 DIN 6885 的带平键轴
Parallel keyed shaft DIN 6885
P – A6x6x25

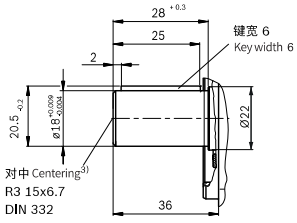

LA10V0 轴向柱塞变量泵
Axial piston variable pump

规格尺寸 10 Dimensions size 10

DR – 压力控制器；公制 A 型安装法兰；系列 52
DR – Pressure controller; mounting flange A metric; series 52

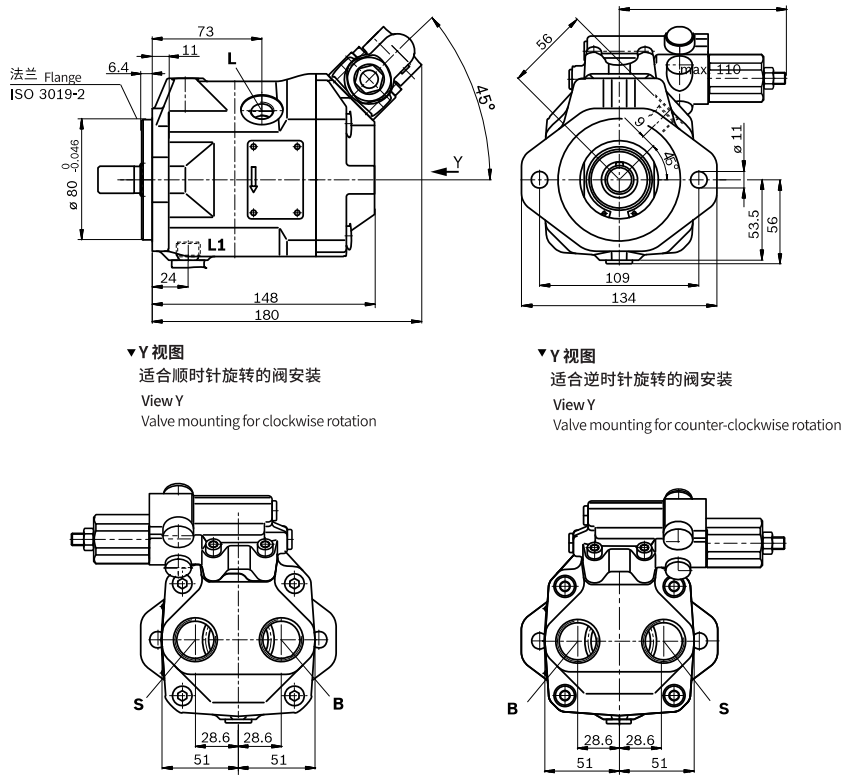

▼Y 视图
适合顺时针旋转的阀安装
View Y
Valve mounting for clockwise rotation

▼Y 视图
适合逆时针旋转的阀安装
View Y
Valve mounting for counter-clockwise rotation

油口 Ports		标准 Standard	规格[4] Size[4]	$p_{max\ abs}$ [bar][5]	状态[8] State[8]
B	工作油口 Working port	DIN 3852	M27 × 2；16 深 deep	315	O
S	吸油口 Suction port	DIN 3852	M27 × 2；16 深 deep	5	O
公制 A 型安装法兰处油口	**Ports at mounting flange A metric**				
L	泄油口 Drain port	DIN 3852[6]	M16 × 1.5；12 深 deep	2	O[7]
L_1	泄油口 Drain port	DIN 3852[6]	M16 × 1.5；12 深 deep	2	X[7]
X（带适配器）with adapter	控制压力 Control pressure	DIN 3852	M14 × 1.5；12 深 deep	315	O
SAE C 型安装法兰处油口	**Ports at mounting flange C SAE**				
L	泄油口 Drain port	DIN 11926[6]	9/16-18UNF-2B；10 深 deep	2	O[7]
L_1	泄油口 Drain port	DIN 11926[6]	9/16-18UNF-2B；10 深 deep	2	X[7]
X（不带适配器）without adapter	控制压力 Control pressure	DIN 11926	7/16-20UNF-2B；11.5 深 deep	315	O

LA10V0 轴向柱塞变量泵
Axial piston variable pump

规格尺寸 18 Dimensions size 18

DR – 液压控制器，顺时针旋转，系列 53
DR – Hydraulic pressure controller, clockwise rotation, series 53

▼ 油口接板 11 Port plate 11

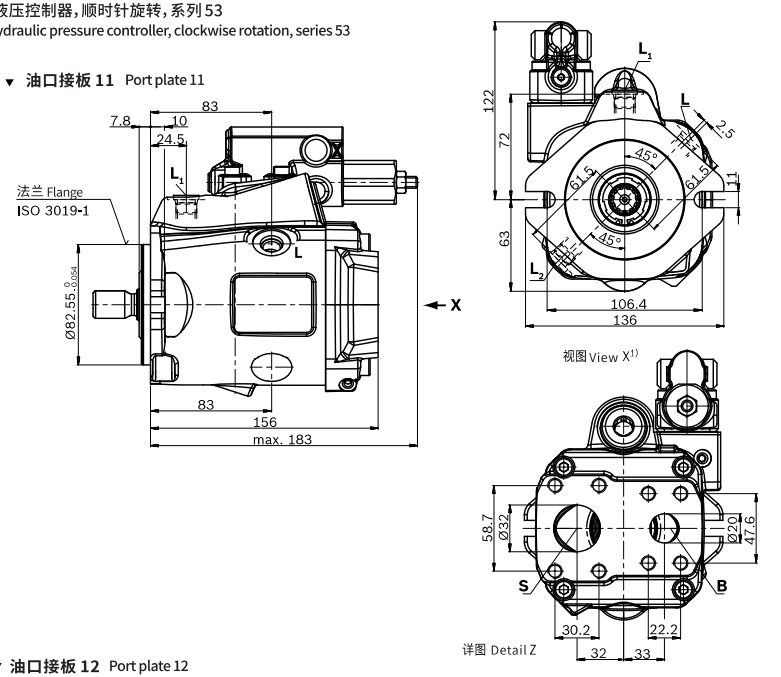

▼ 油口接板 12 Port plate 12

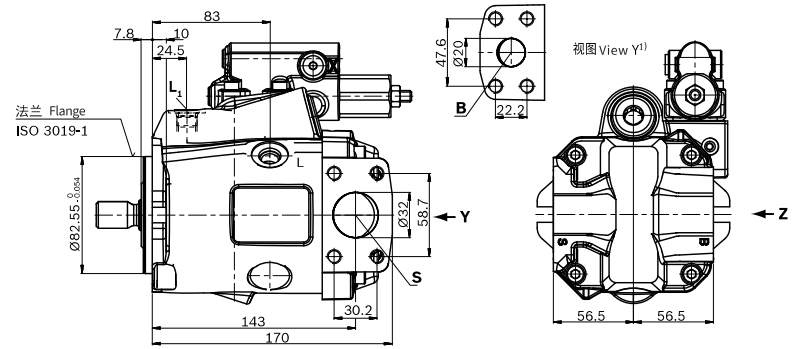

1) 对于逆时针旋转，工作油口的尺寸转过 180°
Dimensions of working ports turned through 180° for counter-clockwise rotation

LA10V0 轴向柱塞变量泵
Axial piston variable pump

规格尺寸 18 Dimensions size 18

▼ 花键轴 3/4 英寸 (SAE J744)
Splined shaft 3/4 in (SAE J744)
S – 11T 16/32DP[1)]

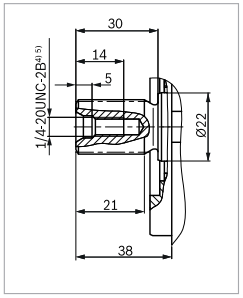

▼ 花键轴 3/4 英寸 (SAE J744)
Splined shaft 3/4 in (SAE J744)
R – 11T 16/32DP[1) 2)]

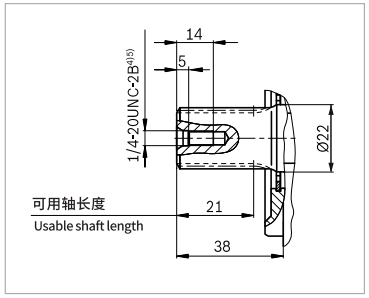

▼ 花键轴 5/8 英寸 (SAE J744)
Splined shaft 5/8 in (SAE J744)
U – 9T 16/32DP[1)]

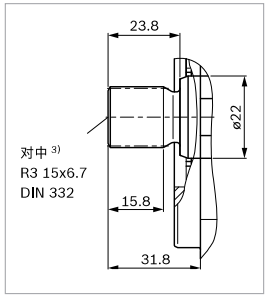

油口 Ports			标准 Standard	规格[5)] Size[5)]	$p_{max\ abs}$ [bar][6)]	状态[11)] State[11)]
B	工作油口 (标准压力系列)	Working port (Standard pressure series)	SAE J518[7)]	3/4"	315	O
	紧固螺纹	Fastening thread	DIN 13	M10 × 1.5; 17 deep		
S	吸油口 (标准压力系列)	Suction port (standard pressure series)	SAE J518[7)]	1 1/4"	5	O
	紧固螺纹	Fastening thread	DIN 13	M10 × 1.5; 17 deep		
L	泄油口	Drain port	DIN 11926[8)]	3/4-16UNF-2B; 12 deep	2	O[9)]
L_1、L_2[10)]	泄油口	Drain port	DIN 11926[8)]	3/4-16UNF-2B; 12 deep	2	X[9)]
X	控制压力	Control pressure	DIN 11926	7/16-20UNF-2A; 11.5 deep	315	O

1) 渐开线花键，符合 ANSI B92.1a，30°压力角，平齿根，侧面配合，公差等级 5
2) 花键 (符合 ANSI B92.1a)，花键的跳动量为与标准值的偏差。
3) 中心孔符合 DIN 332
4) 符合 ASME B1.1 标准的螺纹
5) 请遵照操作说明中有关最大紧固扭矩的说明。
6) 根据不同的应用情况，可能会出现瞬时压力峰值。选择测量设备和接头时应考虑这一点。
7) 公制紧固螺纹与标准值之间存在偏差。
8) 孔口平面可以比标准规定的深。
9) 必须根据安装位置，连接 L、L1 或 L2 (也可参见从第 145 页起的安装说明)。
10) 仅系列 53
11) O = 必须连接 (交付时堵上)
X = 堵上 (正常运行条件下)

1) Involute spline according to ANSI B92.1a, 30° pressure angle, flat root, side fit, tolerance class 5
2) Splines according to ANSI B92.1a, run out of spline is a deviation from standard.
3) Center bore according to DIN 332
4) Thread according to ASME B1.1
5) Observe the instructions in the operating instructions concerning the maximum tightening torques.
6) Momentary pressure spikes may occur depending on the application. Keep this in mind when selecting measuring devices and fittings.
7) Metric fastening thread is a deviation from standard.
8) The spot face can be deeper than as specified in the standard.
9) Depending on the installation position, L, L1 or L 2 must be connected(also see installation instructions starting on page 145).
10) Only series 53
11) O = Must be connected (plugged when delivered)
X = Plugged (in normal operation)

LA10V0 轴向柱塞变量泵
Axial piston variable pump

规格尺寸 28 Dimensions size 28

DR – 液压控制器，顺时针旋转，系列 52[2)]
DR – Hydraulic pressure controller, clockwise rotation, series 52[2)]

▼ **油口接板 11** Port plate 11

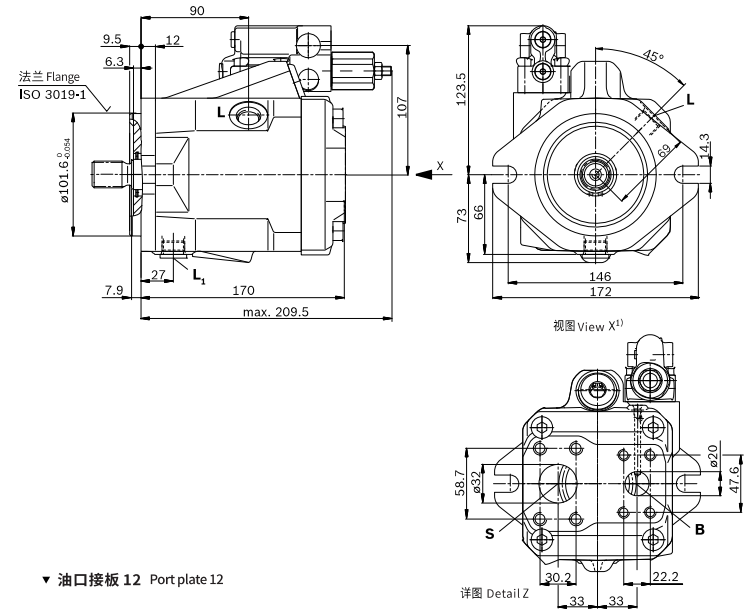

▼ **油口接板 12** Port plate 12

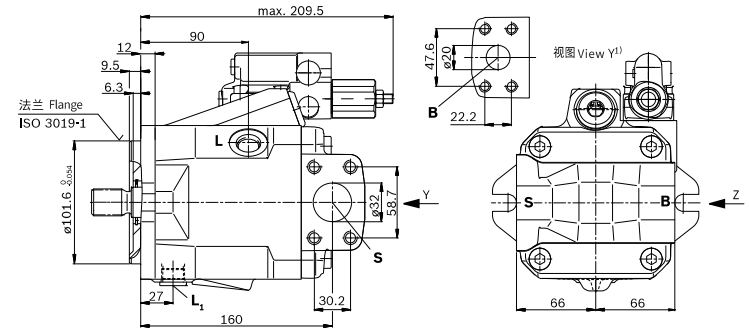

1) 对于逆时针旋转，工作油口的尺寸转过 180°
2) 泵的基本尺寸适用于系列 52 和 53

1) Dimensions of working ports turned through 180° for counter-clockwise rotation
2) Primary dimensions for pump apply to series 52 and 53

LA10V0 轴向柱塞变量泵
Axial piston variable pump

规格尺寸 28 Dimensions size 28

▼ 花键轴 7/8 英寸 (SAE J744)
Splined shaft 7/8in (SAE J744)
S – 13T 16/32DP[1)]

▼ 花键轴 7/8 英寸 (SAE J744)
Splined shaft 7/8in (SAE J744)
R – 13T 16/32DP[1) 2)]

▼ 花键轴 3/4 英寸 (SAE J744)
Splined shaft 3/4 in (SAE J744)
U – 11T 16/32DP[1)]

▼ 花键轴 3/4 英寸 (SAE J744)
Splined shaft 3/4 in (SAE J744)
W – 11T 16/32DP[1)2)]

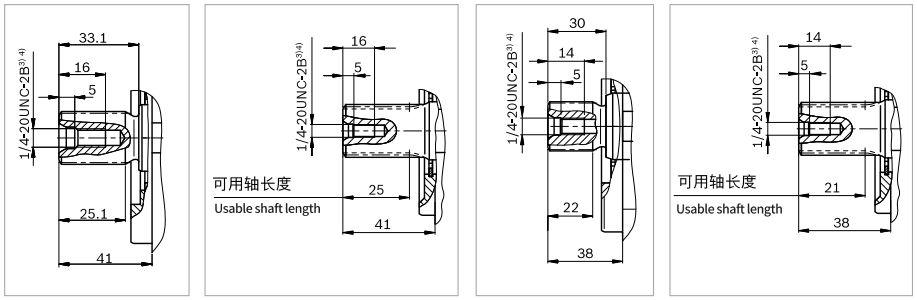

油口 Ports			标准 Standard	规格[4)] Size[4)]	$p_{max\ abs}$ [bar][5)]	状态[10)] State[10)]
B	工作油口 (标准压力系列)	Working port (Standard pressure series)	SAE J518[6)]	3/4"	315	O
	紧固螺纹	Fastening thread	DIN 13	M10 × 1.5; 17 deep		
S	吸油口 (标准压力系列)	Suction port (standard pressure series)	SAE J518[6)]	1 1/4"	5	O
	紧固螺纹	Fastening thread	DIN 13	M10 × 1.5; 17 deep		
L	泄油口	Drain port	DIN 11926[7)]	3/4-16UNF-2B; 12 deep	2	O[8)]
L_1、L_2[9)]	泄油口	Drain port	DIN 11926[7)]	3/4-16UNF-2B; 12 deep	2	X[8)]
X	控制压力	Control pressure	DIN 11926	7/16-20UNF-2A; 11.5 deep	315	O

1) 渐开线花键，符合 ANSI B92.1a，30°压力角，平齿根，侧面配合，公差等级 5
2) 花键 (符合 ANSI B92.1a)，花键的跳动量为与标准值的偏差。
3) 中心孔符合 DIN 332
4) 符合 ASME B1.1 标准的螺纹
5) 请遵照操作说明中有关最大紧固扭矩的说明。
6) 根据不同的应用情况，可能会出现瞬时压力峰值。选择测量设备和接头时应考虑这一点。
7) 公制 紧固螺纹与标准值之间存在偏差。
8) 孔口平面可以比标准规定的深。
9) 必须根据安装位置，连接 L、L1 或 L2 (也可参见从第 145 页起的安装说明)。
10) 仅系列 53
11) O = 必须连接 (交付时堵上)
X = 堵上 (正常运行条件下)

1) Involute spline according to ANSI B92.1a, 30° pressure angle, flat root, side fit, tolerance class 5
2) Splines according to ANSI B92.1a, run out of spline is a deviation from standard.
3) Center bore according to DIN 332
4) Thread according to ASME B1.1
5) Observe the instructions in the operating instructions concerning the maximum tightening torques.
6) Momentary pressure spikes may occur depending on the application. Keep this in mind when selecting measuring devices and fittings.
7) Metric fastening thread is a deviation from standard.
8) The spot face can be deeper than as specified in the standard.
9) Depending on the installation position, L, L1 or L 2 must be connected(also see installation instructions starting on page 145).
10) Only series 53
11) O = Must be connected (plugged when delivered)
X = Plugged (in normal operation)

LA10V0 轴向柱塞变量泵
Axial piston variable pump

规格尺寸 45 Dimensions size 45

DR – 液压控制器，顺时针旋转，系列 52[3)] DR – Hydraulic pressure controller, clockwise rotation, series 52[3)]

▼ **油口接板 11** Port plate 11

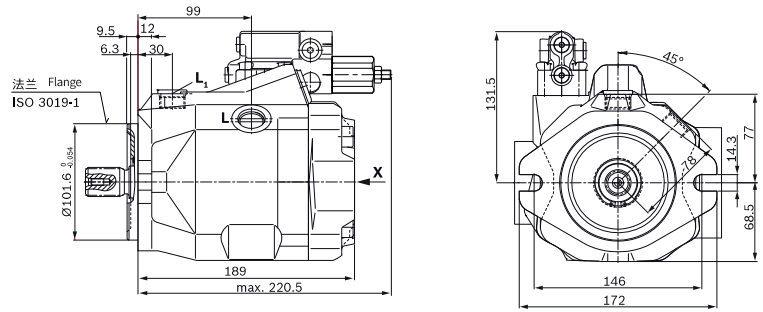

▼ **油口接板 12** Port plate 12

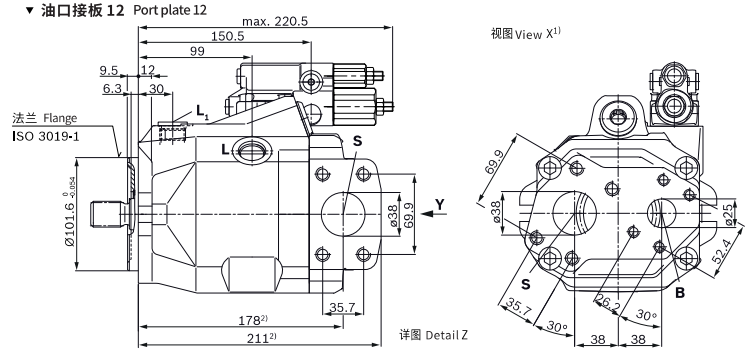

▼ **油口接板 13**
逆时针旋转[2)]

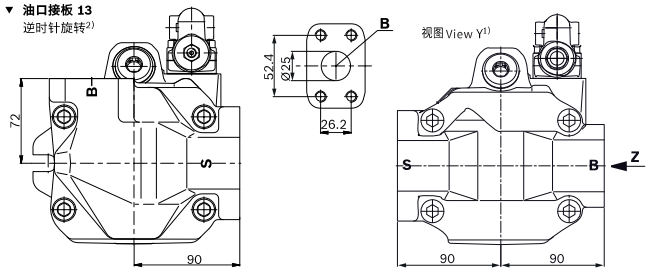

1) 对于逆时针旋转，工作油口的尺寸转过 180°
2) 有关油口接板 13 的工作油口 S 和 B 的尺寸，请参见油口接板 12，脚注 2)。
3) 泵的基本尺寸适用于系列 52 和 53

1) Dimensions of working ports turned through 180° for counter-clockwise rotation
2) For dimensions of working ports S and B for port plate 13, please refer to port plate 12, footnote 2).
3) Primary dimensions for pump apply to series 52 and 53

LA10V0 轴向柱塞变量泵
Axial piston variable pump

规格尺寸 45 Dimensions size 45

▼ 花键轴 1 英寸 SAE J744
Splined shaft 1 in SAE J744
S – 15T 16/32DP[1)]

▼ 花键轴 1 英寸 SAE J744
Splined shaft 1 in SAE J744
R – 15T 16/32DP[1) 2)]

▼ 花键轴 7/8 英寸 SAE J744
Splined shaft 7/8 in SAE J744
U – 13T 16/32DP[1)]

▼ 花键轴 7/8 英寸 SAE J744
Splined shaft 7/8 in SAE J744
W – 13T 16/32DP[1)]

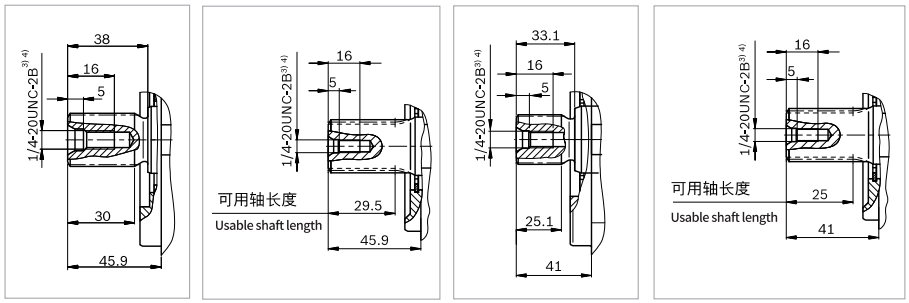

油口 Ports			标准 Standard	规格[4)] Size[4)]	$p_{max\ abs}$ [bar][5)]	状态[10)] State[10)]
B	工作油口(标准压力系列) 紧固螺纹	Working port (Standard pressure series) Fastening thread	SAE J518[6)] DIN 13	3/4" M10 × 1.5; 17 deep	315	O
S	吸油口(标准压力系列) 紧固螺纹	Suction port (standard pressure series) Fastening thread	SAE J518[6)] DIN 13	1 1/4" M10 × 1.5; 17 deep	5	O
L	泄油口	Drain port	DIN 11926[7)]	3/4-16UNF-2B; 12 deep	2	O[8)]
L_1、L_2[9)]	泄油口	Drain port	DIN 11926[7)]	3/4-16UNF-2B; 12 deep	2	X[8)]
X	控制压力	Control pressure	DIN 11926	7/16-20UNF-2A; 11.5 deep	315	O

1) 渐开线花键，符合 ANSI B92.1a，30°压力角，平齿根，侧面配合，公差等级 5
2) 花键(符合 ANSI B92.1a)，花键的跳动量为与标准值的偏差。
3) 符合 ASME B1.1 标准的螺纹
4) 请遵照操作说明中有关最大紧固扭矩的说明。
5) 根据不同的应用情况，可能会出现瞬时压力峰值。
选择测量设备和接头时应考虑这一点。
6) 公制紧固螺纹与标准值之间存在偏差。
7) 孔口平面可以比标准规定的深。
8) 必须根据安装位置，连接 L、L1 或 L2(也可参见从第 145 页起的安装说明)。
9) 仅系列 53
10) O = 必须连接(交付时堵上)
X = 堵上(正常运行条件下)

1) Involute spline according to ANSI B92.1a, 30° pressure angle, flat root, side fit, tolerance class 5
2) Splines according to ANSI B92.1a, run out of spline is a deviation from standard.
3) Thread according to ASME B1.1
4) Observe the instructions in the operating instructions concerning the maximum tightening torques.
5) Momentary pressure spikes may occur depending on the application. Keep this in mind when selecting measuring devices and fittings.
6) Metric fastening thread is a deviation from standard.
7) The spot face can be deeper than as specified in the standard.
8) Depending on the installation position, L, L1 or L2 must be connected(also see installation instructions starting on page 145).
9) Only series 53
10) O = Must be connected (plugged when delivered)
X = Plugged (in normal operation)

LA10V0 轴向柱塞变量泵
Axial piston variable pump

规格尺寸 60 Dimensions size 60

DR – 液压控制器，顺时针旋转，C 型安装法兰，系列 52
DR – Hydraulic pressure controller, clockwise rotation, mounting flange C series 52

▼ **油口接板 11** Port plate 11

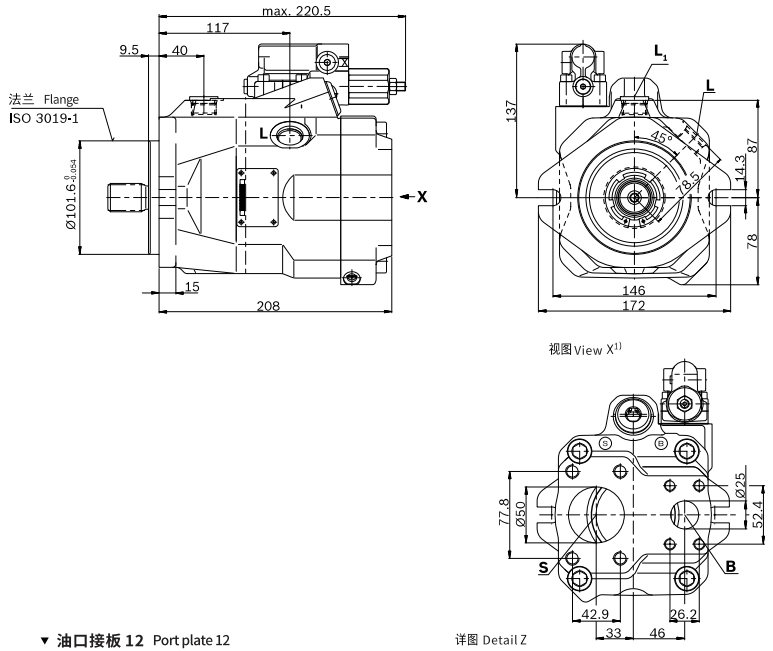

▼ **油口接板 12** Port plate 12

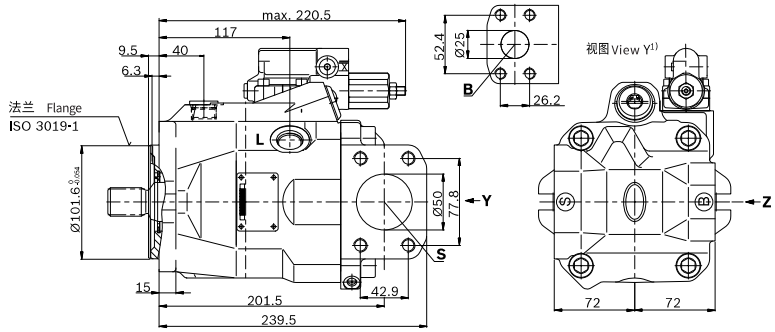

1) 对于逆时针旋转，工作油口的尺寸转过 180°
Dimensions of working ports turned through 180° for counter-clockwise rotation

LA10V0 轴向柱塞变量泵
Axial piston variable pump

规格尺寸 60 Dimensions size 60

DR – 液压控制器，顺时针旋转，D 型安装法兰，系列 52
DR – Hydraulic pressure controller, clockwise rotation, mounting flange D series 52

▼ 油口接板 11 Port plate 11

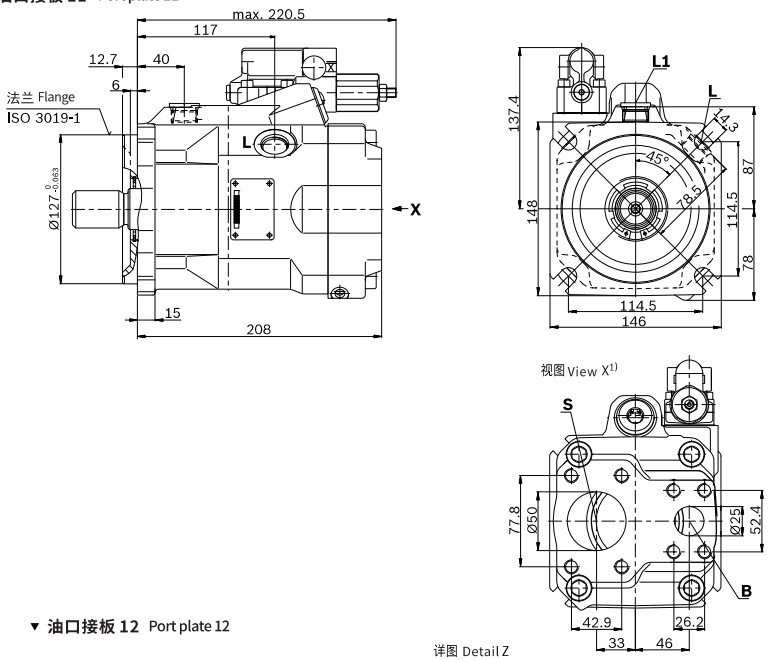

▼ 油口接板 12 Port plate 12

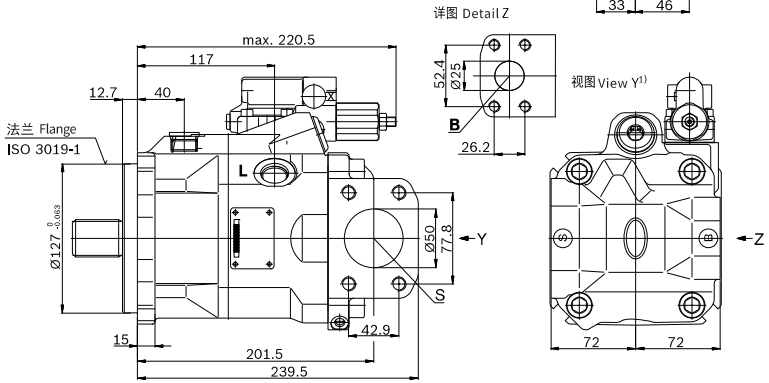

1) 对于逆时针旋转，工作油口的尺寸转过180°
Dimensions of working ports turned through 180° for counter-clockwise rotation

LA10V0 轴向柱塞变量泵
Axial piston variable pump

规格尺寸 63 Dimensions size 63

DR – 液压控制器，顺时针旋转，C 型安装法兰，系列 53
DR – Hydraulic pressure controller, clockwise rotation, mounting flange C series 53

▼ 油口接板 11 Port plate 11

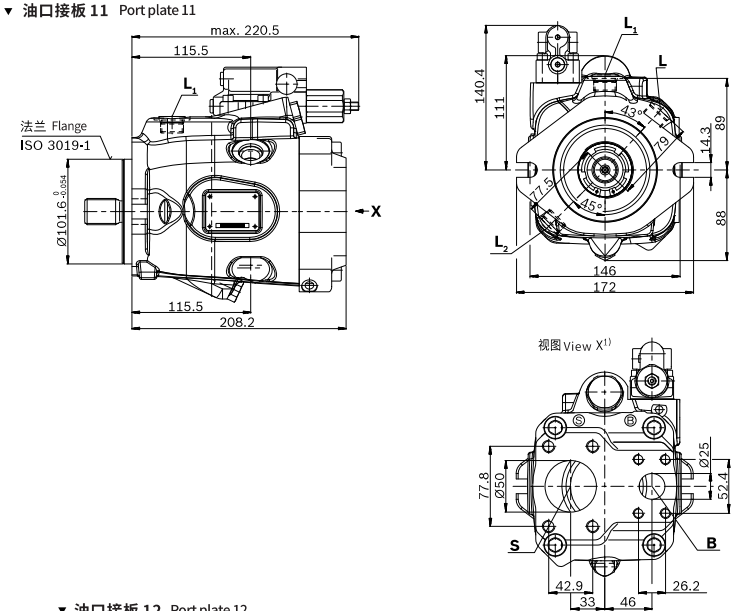

▼ 油口接板 12 Port plate 12

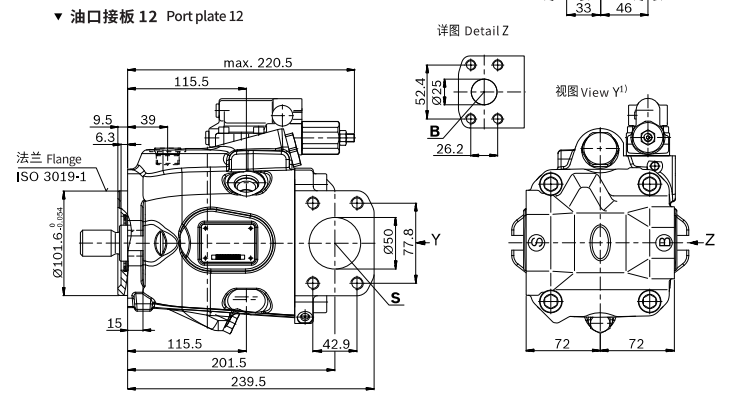

1) 对于逆时针旋转，工作油口的尺寸转过180°
Dimensions of working ports turned through 180° for counter-clockwise rotation

LA10V0 轴向柱塞变量泵
Axial piston variable pump

规格尺寸 63 Dimensions size 63

DR – 液压控制器，顺时针旋转，D 型安装法兰，系列 53
DR – Hydraulic pressure controller, clockwise rotation, mounting flange D series 53

▼ 油口接板 11 Port plate 11

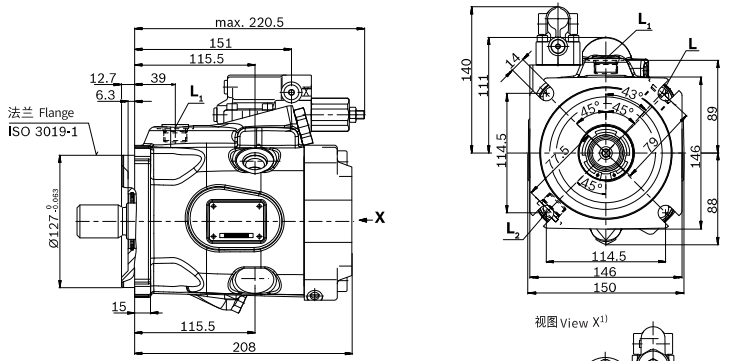

视图 View X[1)]

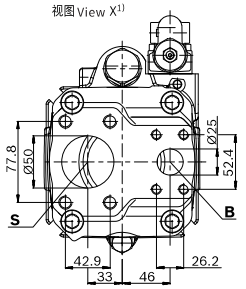

▼ 油口接板 12 Port plate 12

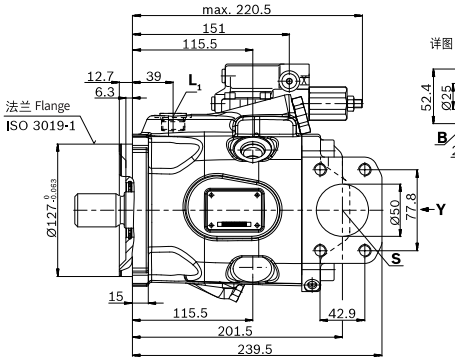

详图 Detail Z

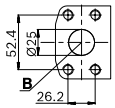

视图 View Y[1)]

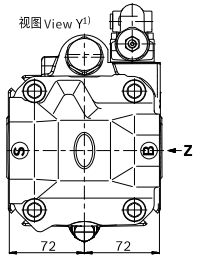

1) 对于逆时针旋转，工作油口的尺寸转过180°
Dimensions of working ports turned through 180° for counter-clockwise rotation

LA10V0 轴向柱塞变量泵
Axial piston variable pump

规格尺寸 63 Dimensions size 63

▼ 花键轴 1 1/4英寸 SAE J744
Splined shaft 1 1/4 in SAE J744
S – 14T 12/24DP[1)]

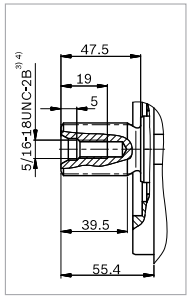

▼ 花键轴 1 1/4英寸 SAE J744
Splined shaft 1 1/4 in SAE J744
R – 14T 12/24DP[1) 2)]

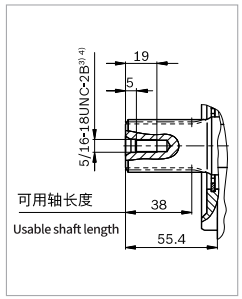

▼ 花键轴 1 英寸 SAE J744
Splined shaft 1 in SAE J744
U – 15T 16/32DP[1)]

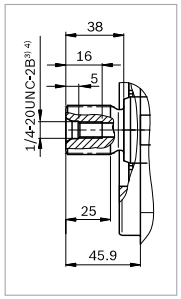

▼ 花键轴 1 英寸 SAE J744
Splined shaft 1 in SAE J744
W – 15T 16/32DP[1)]

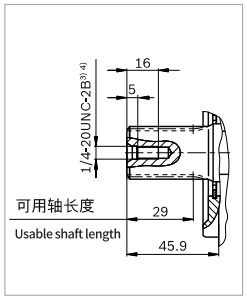

油口 Ports			标准 Standard	规格[4)] Size[4)]	$p_{max\ abs}$ [bar][5)]	状态[10)] State[10)]
B	工作油口 (标准压力系列) 紧固螺纹	Working port (Standard pressure series) Fastening thread	SAE J518[6)] DIN 13	1 " M10 × 1.5; 17 deep	315	O
S	吸油口 (标准压力系列) 紧固螺纹	Suction port (standard pressure series) Fastening thread	SAE J518[6)] DIN 13	2 " M12 × 1.75; 20 deep	5	O
L	泄油口	Drain port	ISO 11926[7)]	7/8-14UNF-2B; 13 deep	2	O[8)]
L_1, L_2[9)]	泄油口	Drain port	ISO 11926[7)]	7/8-14UNF-2B; 13 deep	2	X[8)]
X	控制压力	Control pressure	ISO 11926	7/16-20UNF-2A; 11.5 deep	315	O

1) 渐开线花键，符合 ANSI B92.1a，30°压力角，平齿根，侧面配合，公差等级 5
2) 花键 (符合 ANSI B92.1a)，花键的跳动量为与标准值的偏差。
3) 符合 ASME B1.1 标准的螺纹
4) 请遵照操作说明中有关最大紧固扭矩的说明。
5) 根据不同的应用情况，可能会出现瞬时压力峰值。
选择测量设备和接头时应考虑这一点。

1) Involute spline according to ANSI B92.1a, 30° pressure angle, flat root, side fit, tolerance class 5
2) Splines according to ANSI B92.1a, run out of spline is a deviation from standard.
3) Thread according to ASME B1.1
4) Observe the instructions in the operating instructions concerning the maximum tightening torques.
5) Momentary pressure spikes may occur depending on the application. Keep this in mind when selecting measuring devices and fittings.

LA10V0 轴向柱塞变量泵
Axial piston variable pump

规格尺寸 72 Dimensions size 72

DR – 液压控制器，顺时针旋转，C 型安装法兰，系列 53
DR – Hydraulic pressure controller, clockwise rotation, mounting flange C series 53

▼ 油口接板 11 Port plate 11

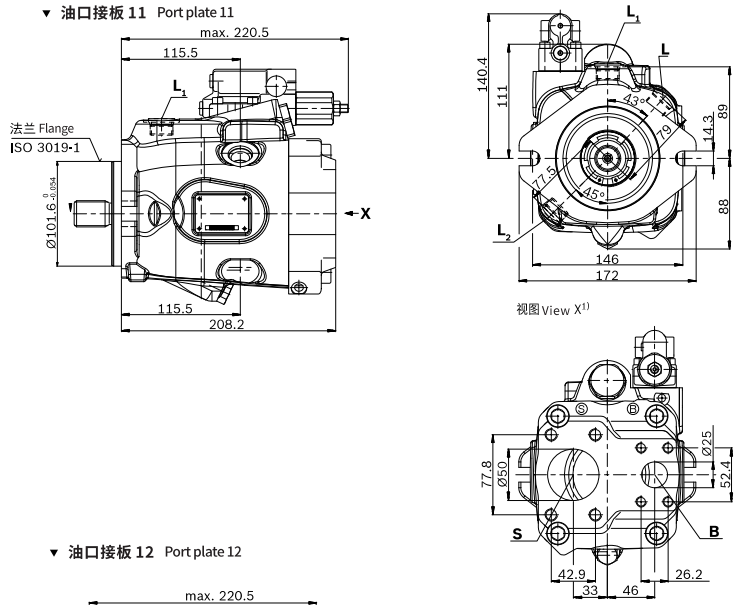

▼ 油口接板 12 Port plate 12

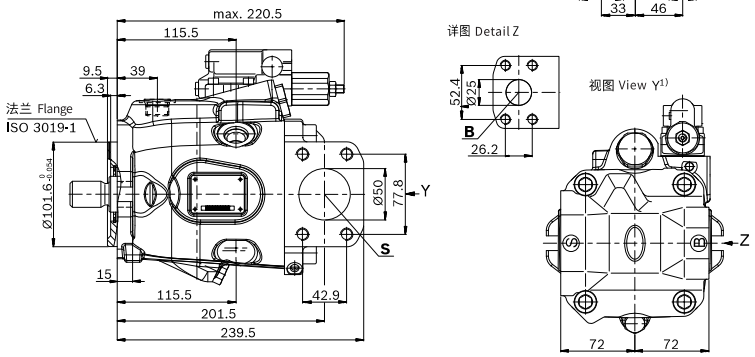

1) 对于逆时针旋转，工作油口的尺寸转过 180°
Dimensions of working ports turned through 180° for counter-clockwise rotation

LA10V0 轴向柱塞变量泵
Axial piston variable pump

规格尺寸 72 Dimensions size 72

DR – 液压控制器，顺时针旋转，D 型安装法兰，系列 53
DR – Hydraulic pressure controller, clockwise rotation, mounting flange D series 53

▼ 油口接板 11 Port plate 11

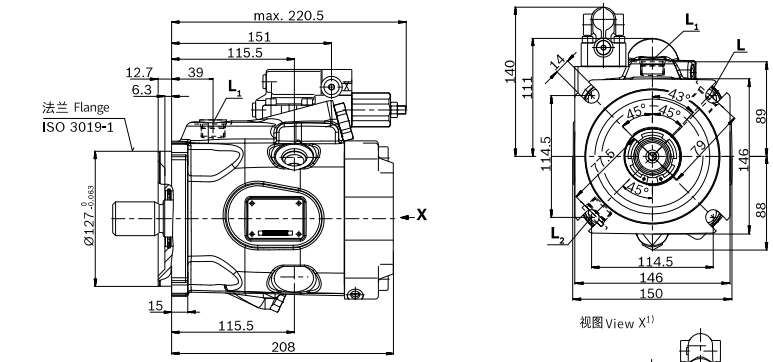

▼ 油口接板 12 Port plate 12

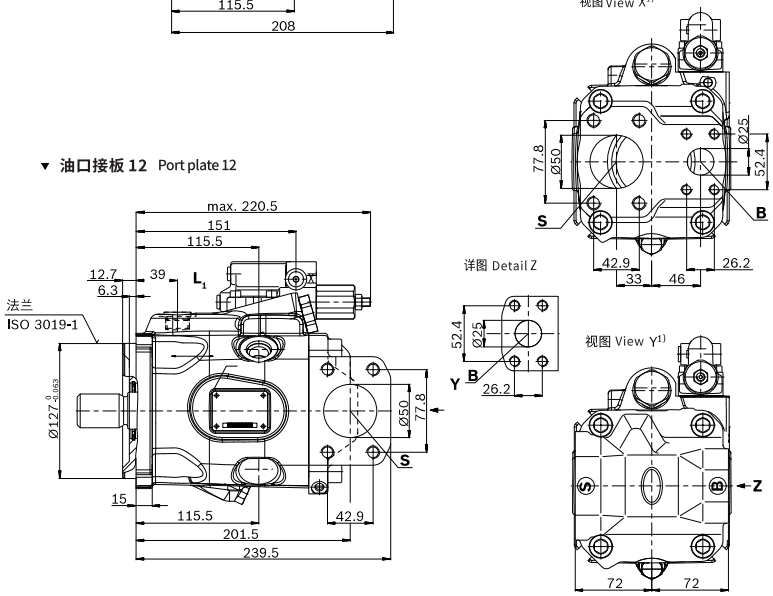

1) 对于逆时针旋转，工作油口的尺寸转过 180°
Dimensions of working ports turned through 180° for counter-clockwise rotation

LA10V0 轴向柱塞变量泵
Axial piston variable pump

规格尺寸 72 Dimensions size 72

▼ 花键轴 1 1/4英寸 SAE J744
Splined shaft 1 1/4 in SAE J744
S – 14T 12/24DP[1)]

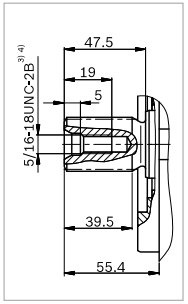

▼ 花键轴 1 1/4英寸 SAE J744
Splined shaft 1 1/4 in SAE J744
R – 14T 12/24DP[1) 2)]

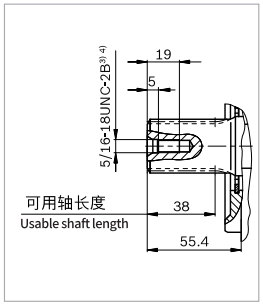

▼ 花键轴 1 英寸 SAE J744
Splined shaft 1 in SAE J744
U – 15T 16/32DP[1)]

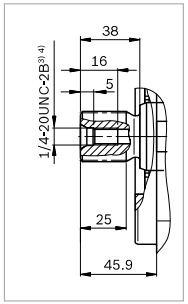

▼ 花键轴 1 英寸 SAE J744
Splined shaft 1 in SAE J744
W – 15T 16/32DP[1)]

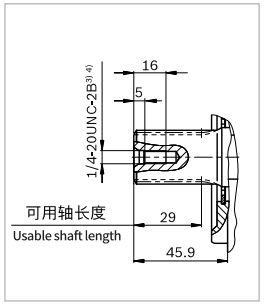

油口 Ports			标准 Standard	规格[4)] Size[4)]	$p_{max\ abs}$ [bar][5)]	状态[10)] State[10)]
B	工作油口(标准压力系列) 紧固螺纹	Working port (Standard pressure series) Fastening thread	SAE J518[6)] DIN 13	1 " M10 × 1.5; 17 deep	315	O
S	吸油口(标准压力系列) 紧固螺纹	Suction port (standard pressure series) Fastening thread	SAE J518[6)] DIN 13	2 " M12 × 1.75; 20 deep	5	O
L	泄油口	Drain port	ISO 11926[7)]	7/8-14UNF-2B; 13 deep	2	O[8)]
L_1、L_2[9)]	泄油口	Drain port	ISO 11926[7)]	7/8-14UNF-2B; 13 deep	2	X[8)]
X	控制压力	Control pressure	ISO 11926	7/16-20UNF-2A; 11.5 deep	315	O

1) 渐开线花键，符合 ANSI B92.1a，30°压力角，平齿根，侧面配合，公差等级 5
2) 花键 (符合 ANSI B92.1a)，花键的跳动量为与标准值的偏差。
3) 符合 ASME B1.1 标准的螺纹
4) 请遵照操作说明中有关最大紧固扭矩的说明。
5) 根据不同的应用情况，可能会出现瞬时压力峰值。
选择测量设备和接头时应考虑这一点。

1) Involute spline according to ANSI B92.1a, 30° pressure angle, flat root, side fit, tolerance class 5
2) Splines according to ANSI B92.1a, run out of spline is a deviation from standard.
3) Thread according to ASME B1.1
4) Observe the instructions in the operating instructions concerning the maximum tightening torques.
5) Momentary pressure spikes may occur depending on the application. Keep this in mind when selecting measuring devices and fittings.

LA10V0 轴向柱塞变量泵
Axial piston variable pump

规格尺寸 85 Dimensions size 85

DR – 液压控制器，顺时针旋转，C 型安装法兰，系列 52
DR – Hydraulic pressure controller, clockwise rotation, mounting flange C series 52

▼ 油口接板 11 Port plate 11

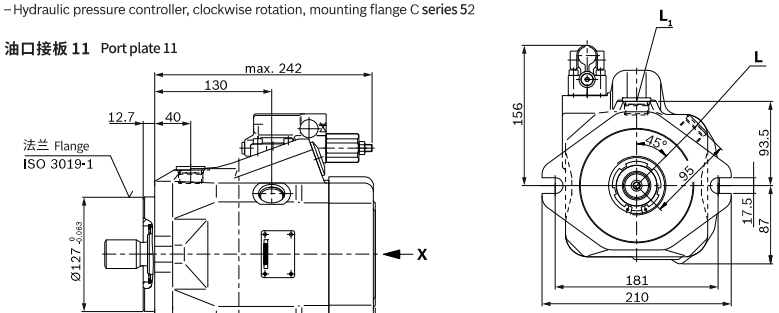

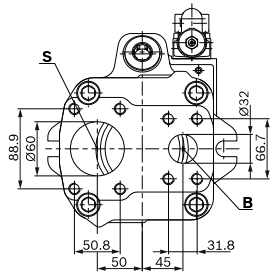

▼ 油口接板 12 Port plate 12

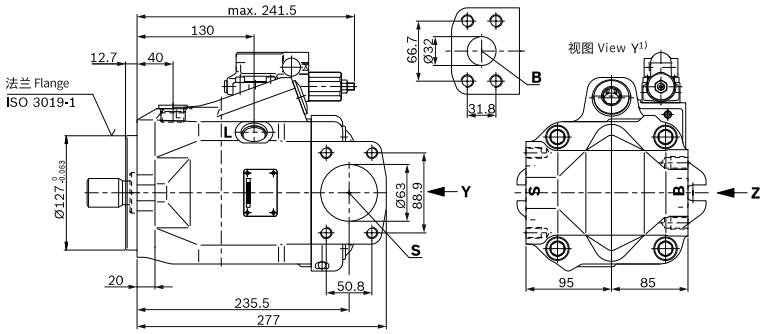

1) 对于逆时针旋转，工作油口的尺寸转过 180°
Dimensions of working ports turned through 180° for counter-clockwise rotation

LA10V0 轴向柱塞变量泵
Axial piston variable pump

规格尺寸 85 Dimensions size 85

DR – 液压控制器，顺时针旋转，D 型安装法兰，系列 53
DR – Hydraulic pressure controller, clockwise rotation, mounting flange D series 53

▼ 油口接板 11 Port plate 11

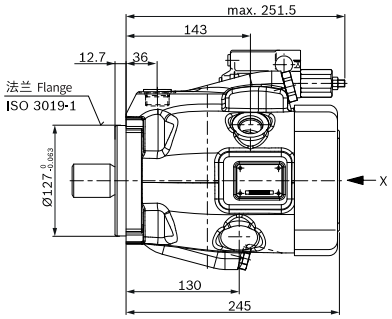

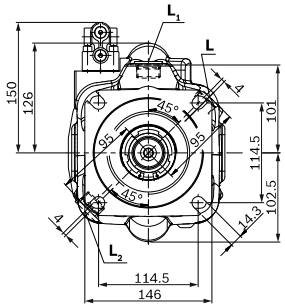

视图 View X1)

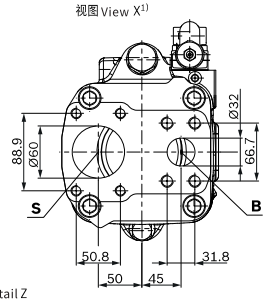

▼ 油口接板 12 Port plate 12

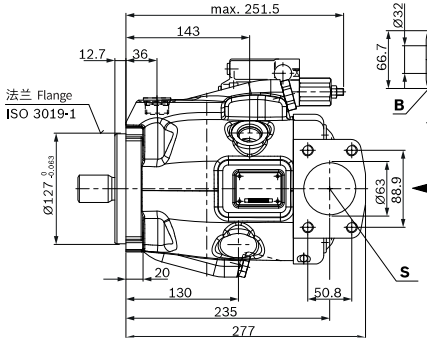

详图 Detail Z

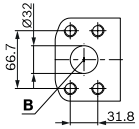

视图 View Y1)

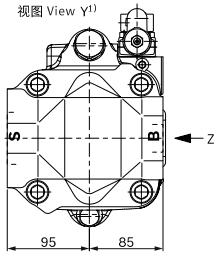

1) 对于逆时针旋转，工作油口的尺寸转过180°
Dimensions of working ports turned through 180° for counter-clockwise rotation

NVICKS® 威克斯液压 VICKS HYDRAULIC

LA10V0 轴向柱塞变量泵
Axial piston variable pump

规格尺寸 85 Dimensions size 85

▼ 花键轴 1 1/2 英寸 SAE J744
Splined shaft 1 1/2 in SAE J744
S – 17T 12/24DP1)

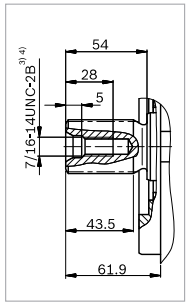

▼ 花键轴 1 1/2 英寸 SAE J744
Splined shaft 1 1/2 in SAE J744
S – 17T 12/24DP1)

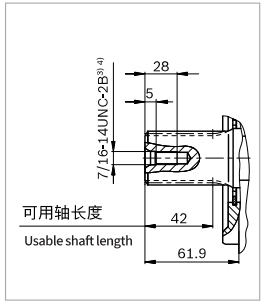

▼ 花键轴 1 1/4 英寸 SAE J744
Splined shaft 1 1/4in SAE J744
U – 14T 12/24DP1)

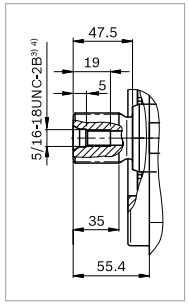

▼ 花键轴 1 1/4 英寸 SAE J744
Splined shaft 1 1/4in SAE J744
U – 14T 12/24DP1)

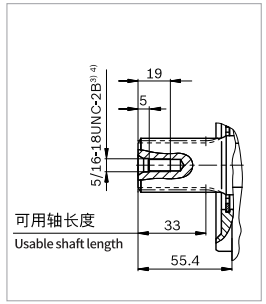

油口 Ports			标准 Standard	规格4) Size4)	$p_{max\ abs}$ [bar]5)	状态10) State10)
B	工作油口（标准压力系列）紧固螺纹	Working port (Standard pressure series) Fastening thread	SAE J518[6)] DIN 13	1 1/4 " M14 × 2; 19 deep	315	O
S	吸油口（标准压力系列）紧固螺纹	Suction port (standard pressure series) Fastening thread	SAE J518[6)] DIN 13	2 1/2" M12 × 1.75; 17 deep	5	O
L	泄油口	Drain port	ISO 11926[7)]	1 1/16-12UNF-2B; 15 deep	2	O[8)]
L_1, L_2[9)]	泄油口	Drain port	ISO 11926[7)]	1 1/16-12UNF-2B; 15 deep	2	X[8)]
X	控制压力	Control pressure	ISO 11926	7/16-20UNF-2A; 11.5 deep	315	O

1) 渐开线花键，符合 ANSI B92.1a，30°压力角，平齿根，侧面配合，公差等级 5
2) 花键（符合 ANSI B92.1a），花键的跳动量为与标准值的偏差。
3) 符合 ASME B1.1 标准的螺纹
4) 请遵照操作说明中有关最大紧固扭矩的说明。
5) 根据不同的应用情况，可能会出现瞬时压力峰值。
选择测量设备和接头时应考虑这一点。

1) Involute spline according to ANSI B92.1a, 30° pressure angle, flat root, side fit, tolerance class 5
2) Splines according to ANSI B92.1a, run out of spline is a deviation from standard.
3) Thread according to ASME B1.1
4) Observe the instructions in the operating instructions concerning the maximum tightening torques.
5) Momentary pressure spikes may occur depending on the application. Keep this in mind when selecting measuring devices and fittings.

LA10V0 轴向柱塞变量泵
Axial piston variable pump

规格尺寸100 Dimensions size 100

DR – 液压控制器，顺时针旋转，C 型安装法兰，系列 53
DR – Hydraulic pressure controller, clockwise rotation, mounting flange C series 53

▼ 油口接板 11 Port plate 11

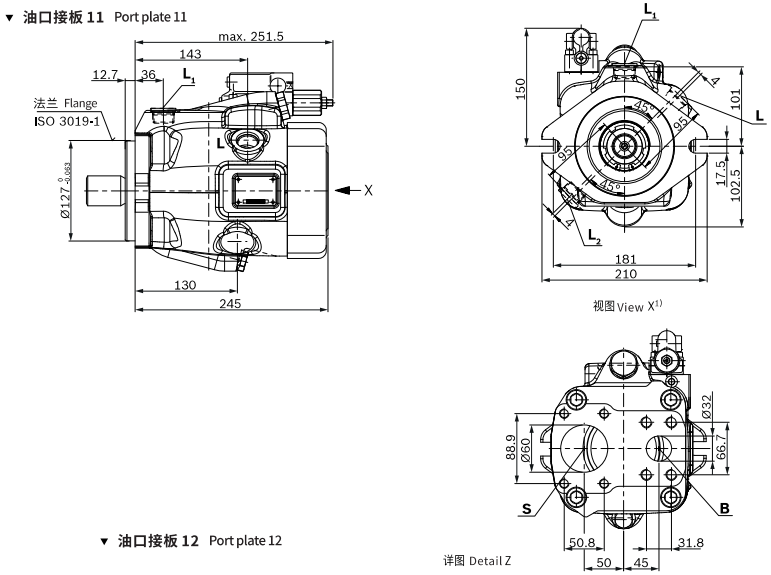

▼ 油口接板 12 Port plate 12

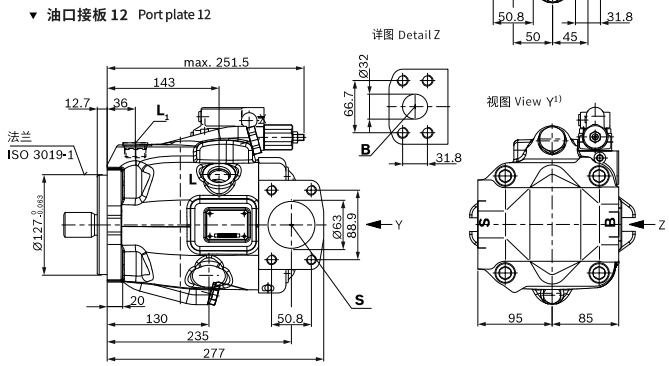

1) 对于逆时针旋转，工作油口的尺寸转过180°
Dimensions of working ports turned through 180° for counter-clockwise rotation

LA10V0 轴向柱塞变量泵
Axial piston variable pump

规格尺寸100 Dimensions size 100

DR – 液压控制器，顺时针旋转，D 型安装法兰，系列 53
DR – Hydraulic pressure controller, clockwise rotation, mounting flange D series 53

▼ 油口接板 11 Port plate 11

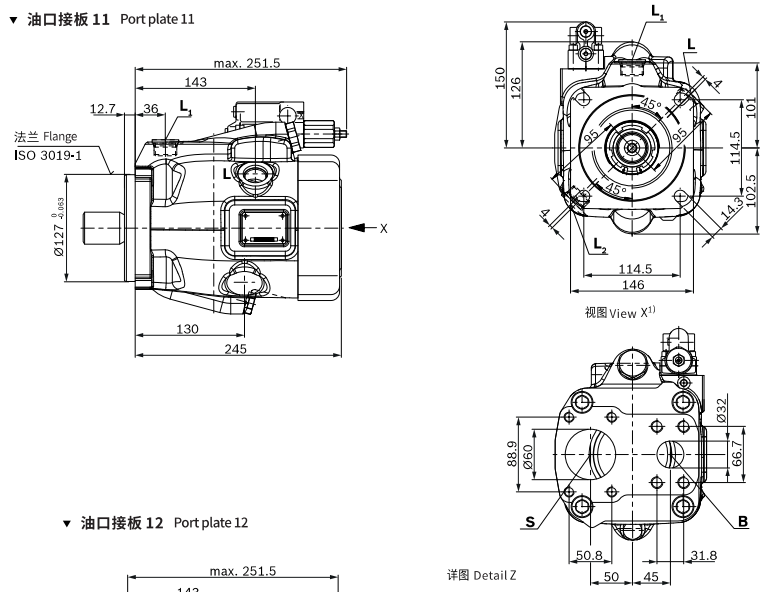

▼ 油口接板 12 Port plate 12

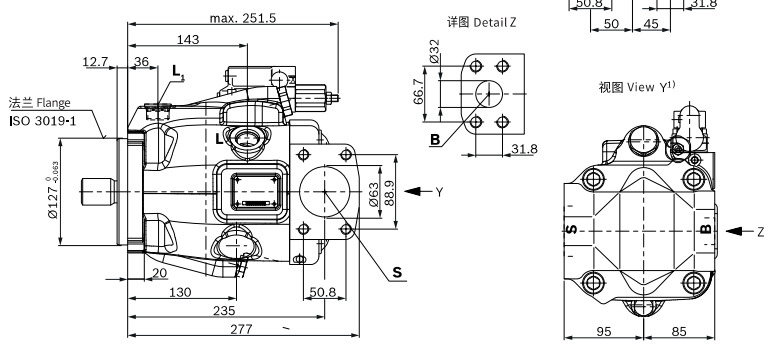

1) 对于逆时针旋转，工作油口的尺寸转过180°
Dimensions of working ports turned through 180° for counter-clockwise rotation

LA10VO 轴向柱塞变量泵
Axial piston variable pump

规格尺寸100 Dimensions size 100

▼ 花键轴 1 1/2英寸 SAE J744
Splined shaft 1 1/2 in SAE J744
S – 17T 12/24DP[1)]

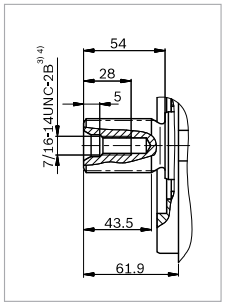

▼ 花键轴 1 1/4英寸 SAE J744
Splined shaft 1 1/4in SAE J744
U – 14T 12/24DP[1)]

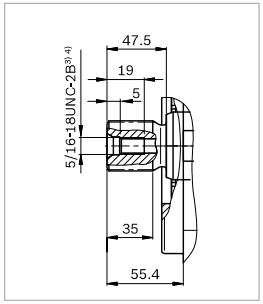

▼ 花键轴 1 1/4英寸 SAE J744
Splined shaft 1 1/4in SAE J744
W – 14T 12/24DP[1)]

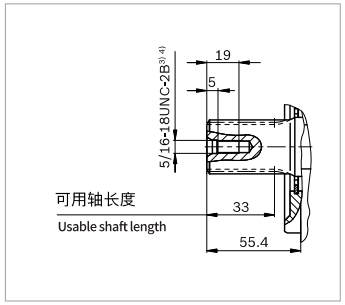

油口	Ports		标准 Standard	规格[4)] Size	$p_{max\ abs}$ [bar][5)]	状态[10)] State
B	工作油口（标准压力系列） 紧固螺纹	Working port (Standard pressure series) Fastening thread	SAE J518[6)] DIN 13	1 1/4 英寸 M14 × 2; 19 深	315	O
S	吸油口（标准压力系列） 紧固螺纹	Suction port (standard pressure series) Fastening thread	SAE J518[6)] DIN 13	2 1/2 英寸 M12 × 1.75; 17 深	5	O
L	泄油口	Drain port	ISO 11926[7)]	1 1/16-12UNF-2B; 15 深	2	O[8)]
L_1, L_2[9)]	泄油口	Drain port	ISO 11926[7)]	1 1/16-12UNF-2B; 15 深	2	X[8)]
X	控制压力	Control pressure	ISO 11926	7/16-20UNF-2A; 11.5 深	315	O

1) 渐开线花键，符合ANSI B92.1a，30°压力角，平齿根，侧面配合，公差等级5
2) 花键（符合ANSI B92.1a），花键的跳动量为与标准值的偏差。
3) 符合ASME B1.1 标准的螺纹
4) 请遵照操作说明中有关最大紧固扭矩的说明。
5) 根据不同的应用情况，可能会出现瞬时压力峰值。选择测量设备和接头时应考虑这一点。

1) Involute spline according to ANSI B92.1a, 30° pressure angle, flat root, side fit, tolerance class 5
2) Splines according to ANSI B92.1a, run out of spline is a deviation from standard.
3) Thread according to ASME B1.1
4) Observe the instructions in the operating instructions concerning the maximum tightening torques.
5) Momentary pressure spikes may occur depending on the application. Keep this in mind when selecting measuring devices and fittings.

LA10VO 轴向柱塞变量泵
Axial piston variable pump

尺寸 Size [mm]

安装说明 Installation instructions

概述

在调试和运行过程中，轴向柱塞单元必须始终充满液压油并排放空气。在停用较长时间之后，也必须遵照上述注意事项，因为轴向柱塞单元可通过液压管路排空。

特别是在“传动轴向上/向下”安装位置，必须完全注油和彻底排气，否则会存在无油运转等危险。

泵壳内的壳体泄油必须通过最高的可用泄油口（L、L12)、L23)）。对于多个设备的组合，必须排出每个泵的壳体放泄油。如果多个单元使用一条共用油箱管路执行该操作，则应确保不会超过每个泵中的壳体压力。共用泄油管路的尺寸设定必须确保：在任何使用情况下，不超出所有连接单元的最大允许壳体压力，特别是在冷启动时。如果无法做到这点，必要时应铺设单独的泄油管路。为了降低噪音值，应使用弹性元件分离所有连接管路，并避免在油箱上方安装。

在所有工况下，吸油管路和泄油管路必须通入油箱中最低油位以下的位置。允许吸油高度 hS 源自总压力损失；但不得高于hS max = 800 mm。在操作过程中以及冷启动过程中，油口 S 处的最低吸油压力也不得降至 0.8 bar 绝对压力以下。

在设计油箱时，确保吸油管路和壳体泄油管路之间有足够的距离。这可以防止加热的回油流量被直接吸回至吸油管路。

注意
在某些安装位置上，可以预料到对控制特性的影响。重力、净重和壳体压力可导致控制特性曲线出现轻微变动，并使响应时间有所改变。

General
The axial piston unit must be filled with hydraulic fluid and air bled during commissioning and operation. This must also be observed following a longer standstill as the axial piston unit may empty via the hydraulic lines.
Particularly with the "drive shaft up/down" installation position, filling and air bleeding must be carried out completely as there is, for example, a danger of dry running.
The case drain fluid in the pump housing must be directed to the reservoir via the highest available drain port (L, L12),L23)). For combinations of multiple units, the case drain fluid must be drained off at each pump. If a shared reservoir line is used for several units, make sure that the case pressure in each pump is not exceeded. The shared drain line must be dimensioned to ensure that the maximum permissible
case pressure of all connected units is not exceeded in any operational circumstances, particularly at cold start. If this is not possible, separate drain lines must be laid if necessary.
To achieve favorable noise values, decouple all connecting lines using elastic elements and avoid above-reservoir installation.
In all operating conditions, the suction line and drain line must flow into the reservoir below the minimum fluid level.
The permissible suction height hS results from the overall loss of pressure. However, it must not be higher than hS max = 800 mm. The minimum suction pressure at port S must also not fall below 0.8 bar absolute during operation and during cold start.
When designing the reservoir, ensure adequate distance between the suction line and the case drain line. This prevents the heated, return flow from being drawn directly back into the suction line.

Note
In certain installation positions, an influence on the control characteristic can be expected. Gravity, dead weight and case pressure can cause minor shifts in control characteristic curves and changes in response time.

安装位置

请参见以下示例 1 至 12。
其它安装位置可根据要求提供。
推荐的安装位置：1 和 3

Installation position

See the following examples 1 to 12.
Additional installation positions are possible upon request.
Recommended installation position: 1 and 3

在油箱下方安装（标准）

在油箱下方安装是指轴向柱塞单元安装在油箱外部，最低油位以下。

Below-reservoir installation (standard)

Below-reservoir installation is when the axial piston unit is installed outside of the reservoir and below the minimum fluid level.

安装位置 Installation position	排气 Air bleeding	注油 Filling
1[2)] 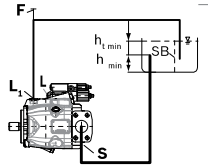	F	S + L OR L_1
2[1)] 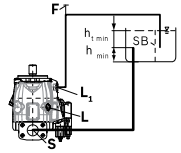	F	S + L_1
3[3)] 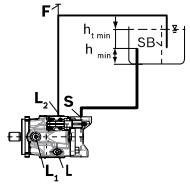	F	S + L OR L_1
4 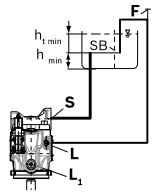	F	S + L OR L_1

1) 由于在此位置不能完全排气和注油，在安装之前应在水平位置对泵进行排气和注油。
2) 对于系列52 的NG10 和NG28，L1 在对面；如有必要，之后应连接L。
3) 仅系列53

1) Because complete air bleeding and filling are not possible in this position, the pump should be air bled and filled in a horizontal position before installation.
2) For NG10 and NG28 series 52, L1 is opposite, L must then be connected if necessary.
3) Only series 53

LA10VO 轴向柱塞变量泵
Axial piston variable pump

在油箱上方安装

油箱上方安装意味着轴向柱塞单元安装在油箱最低油位以上。
为避免轴向柱塞单元在位置 6 排空，高度差 $h_{ES\,min}$ 必须至少为25 mm。
请遵守最大允许吸油高度 $h_{S\,max}$ = 800 mm 的要求。

Above-reservoir installation

Above-reservoir installation means that the axial piston unit is installed above the minimum fluid level of the reservoir.
To prevent the axial piston unit from draining, a height difference $h_{ES\,min}$ of at least 25 mm is required in position 6
Observe the maximum permissible suction height
$h_{S\,max}$ = 800 mm.

安装位置 Installation position	排气 Air bleeding	注油 Filling
5 [2] 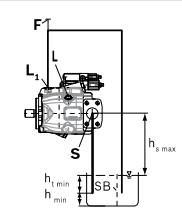	F	L_1 或 L
6 [1][2] 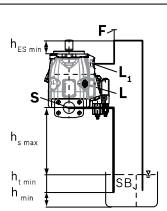	F	L_1
7 [3] 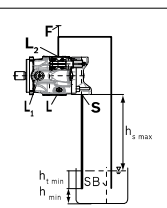	F	L_2
8 [1] 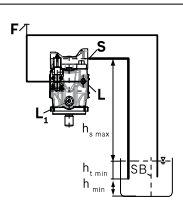	F	S 或 L

油箱内安装

在油箱内安装是指轴向柱塞单元安装在油箱内，低于最低油位。
轴向柱塞单元需完全浸没于液压油内。如果最小油位等于或低于泵的上部边缘，参见章节“油箱上方安装”。
带有电气部件（例如：电气控制器、传感器）的轴向柱塞单元不得安装在油箱的油位以下。

Reservoir installation

Inside-reservoir installation is when the axial piston unit is installed in the reservoir below the minimum fluid level. The axial piston unit is completely below the hydraulic fluid.
If the minimum fluid level is equal to or below the upper edge of the pump, see chapter "Above-reservoir installation".
Axial piston units with electric components (e.g. electric controls, sensors) must not be installed in a reservoir below the fluid level.

安装位置 Installation position	排气 Air bleeding	注油 Filling
9 [2] 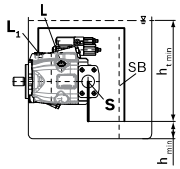	通过可用的最高油口 L Via the highest available port L	由于位置低于液压油油位，通过打开的油口 L 或 L1 自动进行 Automatically via the open port L or L1 due to the position under the hydraulic fluid level
10 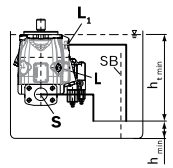	通过可用的最高油口 L_1 Via the highest available port L_1	由于位置低于液压油油位，通过打开的油口 L、L_1 或 S 自动 进行 Automatically via the open port L, L_1 or S due to the position under the hydraulic fluid level
11 [3] 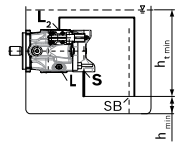		
12 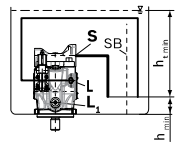	通过可用的最高油口 L Via the highest available port L_1	由于位置低于液压油油位，通过打开的油口 L、L_1 或 S 自动 进行 Automatically via the open port L, L_1 or S due to the position under the hydraulic fluid level

LA10VO 轴向柱塞变量泵
Axial piston variable pump

1) 由于在此位置不能完全排气和注油，在安装之前应在水平位置对泵进行排气和注油。
2) 对于系列 52 的 NG10 和 NG28，L1 在对面；如有必要，之后应连接 L。
3) 仅系列 53

1) Because complete air bleeding and filling are not possible in this position, the pump should be air bled and filled in a horizontal position before installation.
2) For NG10 and NG28 series 52, L1 is opposite, L must then be connected if necessary.
3) Only series 53

注意

油口 F 是外部管道的一部分，必须由客户提供，以便于注油和排气。

Note

Port F is part of the external piping and must be provided on the customer side to make filling and air bleeding easier.

关键参数和总成注意事项

关键参数	
F	注油/排气
S	吸油口
L; L_1	泄油口
SB	隔板（挡板）
$h_{t\,min}$	所需最低浸没深度 (200 mm)
h_{min}	到油箱底部所需最短距离 (100 mm)
$h_{ES\,min}$	为了防止轴向柱塞单元排空所需的最小高度 (25 mm)。
$h_{S\,max}$	最大允许吸油高度 (800 mm)

key and assemblynote

Key parameter	
F	Filling / air bleeding
S	Suction port
L; L_1	Drain port
SB	Baffle (baffle plate)
$h_{t\,min}$	Minimum required immersion depth (200 mm)
h_{min}	Minimum required distance to reservoir bottom (100 mm)
$h_{ES\,min}$	Minimum necessary height required to protect the axial piston unit from draining (25 mm)
$h_{S\,max}$	Maximum permissible suction height (800 mm)

LA11VO

轴向柱塞变量泵
Axial Piston Variable Pump

特性

- 斜盘结构轴向柱塞变量泵，用于开式回路液压系统中的静液压传动。
- 主要为行走作业机械应用而设计。
- 在油箱加压或使用选装内置加注泵 (叶轮) 的条件下，泵在自动起动注油状态下操作。
- 提供满足各种应用要求的各种控制选装件。
- 功率控制选装件在外部可调，即使当泵运行时也能进行。
- 通轴驱动适合加入的齿轮泵和轴向柱塞泵，即 100% 通轴驱动。
- 输出流量与驱动速度成比例并且可以在 $q_{V\,max}$ 和 $q_{V\,min} = 0$ 之间无级变化。

Features

- Variable axial piston pump of swashplate design for hydrostatic drives in open circuit hydraulic system.
- Designed primarily for use in mobile applications.
- The pump operates under self-priming conditions, with tank pressurization, or with an optional built-in charge pump (impeller).
- A comprehensive range of control options is available matching any application requirement.
- Power control option is externally adjustable, even when the pump is running.
- The through drive is suitable for adding gear pumps and axial piston pumps up to the same, i.e. 100% through drive.
- The output flow is proportional to the drive speed and infinitely variable between $q_{V\,max}$ and $q_{V\,min} = 0$.

订货型号/标准产品 Ordering Code / Standard Program

LA11V		O			/	1			–	N							
01	02	03	04	05		06	07	08		09	10	11	12	13	14	15	16

轴向柱塞元件 Axial piston unit

01	斜盘设计、变量、公称压力 350 bar、最大压力 400 bar Swashplate design, variable, nominal pressure 350 bar, maximum pressure 400 bar	LA11V

加注泵 (叶轮) Charge pump (impeller)

		40	60	75	95	130	145	190	260	
02	不带加注泵 (没有代码) without charge pump (no code)	●	●	●	●	●	●	●	●	
	带有加注泵 with charge pump	–	–	–	–	●	●	●	●	L

运转 Operation

03	泵，开式回路 Pump, open circuit	O

规格 Size

04	≈ 排量 $V_{g\,max}$ (cm^3) ≈ Displacement $V_{g\,max}$ in cm^3	40	60	75	95	130	145	190	260

控制单元 Control unit

05	功率控制 Power control		LR					●	●	●	●	●	●	●	●	LR
	带压力切断阀 with pressure cut-off			D				●	●	●	●	●	●	●	●	L . D . .
	带负载感应 with load sensing						S	●	●	●	●	●	●	●	●	L . . . S
	带行程限位器 with stroke limiter	负极特性 negative characteristic $\Delta p = 25$ bar					H1	●	●	●	●	●	●	●	●	L . . . H1
		负极特性 negative characteristic $\Delta p = 10$ bar					H5	●	●	●	●	●	●	●	●	L . . . H5
		正极特性 positive characteristic $\Delta p = 25$ bar					H2	●	●	●	●	●	●	●	●	L . . . H2
		正极特性 positive characteristic $\Delta p = 10$ bar					H6	●	●	●	●	●	●	●	●	L . . . H6
		U = 12 V					U1	●	●	●	●	●	●	●	●	L . . . U1
		U = 24 V					U2	●	●	●	●	●	●	●	●	L . . . U2
	压力控制 Pressure control		DR					●	●	●	●	●	●	●	●	DR
		带负载感应 with load sensing	DRS					●	●	●	●	●	●	●	●	DRS
		远程控制 remote controlled	DRG					●	●	●	●	●	●	●	●	DRG
	电气控制带比例电磁铁 Electric control with proportional solenoid (正极特性) (positive characteristic)	U = 12 V	EP1					●	●	●	●	●	●	●	●	EP1
		U = 24 V	EP2					●	●	●	●	●	●	●	●	EP2
		带压力切断阀 with pressure cut-off		D				●	●	●	●	●	●	●	●	EP. D

系列 Series

06		1

索引 Index

07	规格 40 ... 130	Size 40 ... 130	0
	规格 145 ... 260	Size 145 ... 260	1

LA11VO 轴向柱塞变量泵
Axial piston variable pump

订货型号/标准产品 Ordering Code / Standard Program

LA11V		O			/	1			–	N							
01	02	03	04	05		06	07	08		09	10	11	12	13	14	15	16

旋转方向 Direction of rotation

08	从轴端看 Viewed from shaft end	顺时针	clockwise	R
		逆时针	counter-clockwise	L

密封件 Seals

09	NBR (丁腈橡胶)，FKM 轴密封圈 (氟橡胶) NBR (nitrile-caoutchouc), shaft seal ring in FKM (fluor-caoutchouc)	N

轴端 (有关允许输入扭矩和通轴驱动扭矩，参见第156页)
Shaft end (see page 156 for permissible input and through drive torques)

			40	60	75	95	130	145	190	260	
10	用于单级泵和组合泵的花键轴 DIN 5480 Splined shaft DIN 5480 for single and combination pump		●	●	●	●	●	●	●	●	Z
	平键轴，符合 DIN 6885 Parallel keyed shaft DIN 6885		●	●	●	●	●	●	●	●	P
	花键轴 ANSI B92.1a–1976 Splined shaft ANSI B92.1a–1976	用于单级泵 for single pump	●	●	●	●	●	●	●	●	S
		用于组合泵 for combination pump	●	●	●	–1)	–1)	–1)	●	●	T

安装法兰 Mounting flange

		40	60	75	95	130	145	190	260	
11	SAE J744 – 2 孔 SAE J744 – 2-hole	●	●	–	–	–	–	–	–	C
	SAE J744 – 4 孔 SAE J744 – 4-hole	–	–	●	●	●	●	●	●	D
	SAE J617 2) (SAE 3) SAE J617 2) (SAE 3)	–	–	–	●	●	●	●	–	G

工作管路油口 Service line ports

		40	60	75	95	130	145	190	260	
12	SAE 侧压力与吸油口，对侧(带有公制紧固螺纹) Pressure and suction port SAE, at side, opposite side (with metric fastening threads)	●	●	●	●	●	●	●	●	12

通轴驱动 (有关附件参见第183页) **Through drive** (see page 183 for attachments)

	法兰 SAE J744 3) Flange SAE J744 3)		花键轴联轴器 Coupler for splined shaft		40	60	75	95	130	145	190	260	
13	–		–		●	●	●	●	●	●	●	●	N00
	82-2	(A)	5/8in	9T 16/32DP (A)	●	●	●	●	●	●	●	●	K01
			3/4in	11T 16/32DP (A-B)	❍	●	❍	●	●	●	❍	❍	K52
	101-2	(B)	7/8in	13T 16/32DP (B)	●	●	●	●	●	●	●	●	K02
			1 in	15T 16/32DP (B-B)	●	●	●	●	●	●	●	●	K04
			W35	2x30x16x9g	●	●	●	●	●	●	●	●	K79
	127-2	(C) 4)	1 1/4in	14T 12/24DP (C)	–	●	●	●	●	●	●	●	K07
			1 1/2in	17T 12/24DP (C-C)	–	–	–	●	●	●	●	●	K24
			W30	2x30x14x9g	–	●	●	●	●	●	●	●	K80
			W35	2x30x16x9g	–	●	●	●	●	●	●	●	K61
	152-4	(D)	1 1/4in	14T 12/24DP (C)	–	–	●	●	●	●	●	●	K86
			1 3/4in	13T 8/16DP (D)	–	–	–	–	●	●	●	●	K17
			W40	2x30x18x9g	–	–	●	●	●	●	●	●	K81
			W45	2x30x21x9g	–	–	–	●	●	●	●	●	K82
			W50	2x30x24x9g	–	–	–	–	●	●	●	●	K83
	165-4	(E)	1 3/4in	13T 8/16DP (D)	–	–	–	–	–	–	●	●	K72
			W50	2x30x24x9g	–	–	–	–	–	–	●	●	K84
			W60	2x30x28x9g	–	–	–	–	–	–	–	●	K67

LA11VO 轴向柱塞变量泵
Axial piston variable pump

订货型号/标准产品 Ordering Code / Standard Program

LA11V		O			/	1			–	N							
01	02	03	04	05		06	07	08		09	10	11	12	13	14	15	16

摆动角指示器 (第186页) **Swivel angle indicator** (page 186)

			40	60	75	95	130	145	190	260	
14	不带摆动角指示器 (无符号)	without swivel angle indicator (no symbol)	●	●	●	●	●	●	●	●	
	带光学摆动角指示器	with optical swivel angle indicator	●	–	●	●	●	●	●	●	V
	带有电子斜盘倾角传感器	with electric swivel angle sensor	●	–	●	●	●	●	●	●	R

电磁铁插头 (第185页) **Connector for solenoids** (page 185)

		40	60	75	95	130	145	190	260	
15	DEUTSCH，2 针注塑插头 – 不带镇流器二极管 DEUTSCH connector molded, 2-pin – without suppressor diode	●	●	●	●	●	●	●	●	P

标准/特殊型号 Standard / special version

16	标准版本 Standard version	不带符号 without symbol	
		结合附件或附件泵 combined with attachment part or attachment pump	-K
	特殊型号 Special version		-S
		结合附件或附件泵 combined with attachment part or attachment pump	-SK

1) 适用于组合泵的 S 轴！
2) 用于安装内燃机的飞轮壳体
3) 2 ≙ 2 孔；4 ≙ 4 孔
4) 规格 190 和 260，带有 2 + 4 孔法兰

1) S-shaft suitable for combination pump!
2) To fit the flywheel case of the combustion engine
3) 2 ≙ 2-hole; 4 ≙ 4-hole
4) Size 190 and 260 with 2 + 4-hole flange

● = 可供货　❍ = 根据要求供货　– = 不可供货　▭ = 优选型号
● = available　● = on request　– = not available　▭ = preferred program

技术参数 Technical Data

液压油 Hydraulic fluid

在开始项目规划之前，请参考我们的技术数据表 RC 90220 (矿物油)、RC 90221 (环保型液压油) 和 RC 90223 (HF 液压油)，以获取有关液压油选择和工作条件的详细信息。
变量泵LA11VO不适用于 HFA、HFB 和 HFC。如果使用 HFD 或环保型液压油，必须遵循 RC 90221 和 RC 90223 中有关技术参数和密封件的限制。
订货时，请指明所采用的液压油。
Before starting project planning, please refer to our data sheets RE 90220 (mineral oil), RE 90221 (environmentally acceptable hydraulic fluids) and RE 90223 (HF hydraulic fluids) for detailed information regarding the choice of hydraulic fluid and operating conditions.

The variable pump LA11VO is not suitable for operating with HFA, HFB and HFC. If HFD or environmentally acceptable hydraulic fluids are being used, the limitations regarding technical data and seals mentioned in RE 90221 and RE 90223 must be observed.
When ordering, please indicate the used hydraulic fluid.

工作粘度范围 Operating viscosity range

为了获得最佳效率和使用寿命，请在以下最佳范围内选择工作粘度 (工作温度下)：

ν_{opt} = 最佳工作粘度 16 至 36 mm²/s

根据油箱温度 (开式回路)。

For optimum efficiency and service life, select an operating viscosity (at operating temperature) within the optimum range of

ν_{opt} = optimum operating viscosity 16 to 36 mm²/s

depending on the tank temperature (open circuit).

选择图 Selection diagram

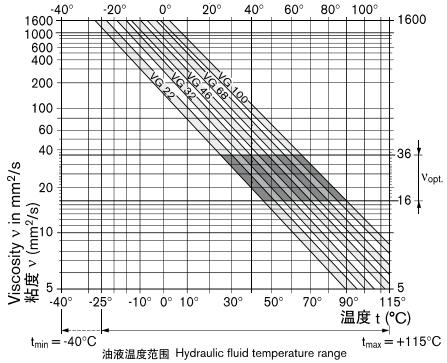

粘度范围限制 Limits of viscosity range

粘度的限值如下所示：
The limiting values for viscosity are as follows:

ν_{min} = 5 mm²/s
短时间 (t < 3 min)
在最大允许温度 t_{max} = +115 °C。

ν_{max} = 1600 mm²/s
短时间 (t < 3 min)
在冷启动时 (p ≤ 30 bar，n ≤ 1000 rpm，t_{min} = -40 °C)。仅适用于空载启动。必须在大约 15 分钟内达到最佳工作粘度。

请注意，局部温度 (如轴承区域) 不得超过最大油液温度 115 °C。轴承区域的温度比壳体泄油平均温度最多高 5 K，具体取决于压力和转速。

在 -40 °C 至 -25 °C 温度范围内 (冷启动阶段) 需要采取特殊措施，具体情况请向我们咨询。

有关在低温下使用的详细信息，请参见 RC 90300-03-B。

ν_{min} = 5 mm²/s
Short-term (t < 3 min)
At max. perm. temperature of t_{max} = +115°C.

ν_{max} = 1600 mm²/s
Short-term (t < 3 min)
At cold start (p ≤ 30 bar, n ≤ 1000 rpm, t_{min} = -40°C).
Only for starting up without load. Optimum operating viscosity must be reached within approx. 15 minutes.

Note that the maximum hydraulic fluid temperature of 115°C must not be exceeded locally either (e.g. in the bearing area). The temperature in the bearing area is – depending on pressure and speed – up to 5 K higher than the average case drain temperature.
Special measures are necessary in the temperature range from -40°C and -25°C (cold start phase), please contact us.
For detailed information about use at low temperatures, see RE 90300-03-B.

关于选择液压油的详细信息 Details regarding the choice of hydraulic fluid

要正确地选择液压油，需要知道与环境温度相关的工作温度：闭式回路中的油路温度、开式回路中的油箱温度。

选择液压油时，工作温度范围内的工作粘度应处于最佳范围内 ($\nu_{最佳}$) – 参见选择图的阴影区域。我们建议在所有情况下都应选择较高的粘度等级。

示例：在环境温度为 X °C 时，将工作温度设置为 60 °C。在最佳工作粘度范围 ($\nu_{最佳}$；阴影区域) 内，此温度与粘度等级 VG 46 和 VG 68 相对应；应选择：VG 68。

The correct choice of hydraulic fluid requires knowledge of the operating temperature in relation to the ambient temperature: in an open circuit the tank temperature.
The hydraulic fluid should be chosen so that the operating viscosity in the operating temperature range is within the optimum range ($\nu_{opt.}$) – see the shaded area of the selection diagram. We recommended that the higher viscosity class be selected in each case.
Example: At an ambient temperature of X°C an operating temperature of 60°C is set. In the optimum operating viscosity range (ν_{opt}; shaded area) this corresponds to the viscosity classes VG 46 and VG 68; to be selected: VG 68.

请注意：Please note:
壳体泄油温度 (受压力和速度的影响) 始终高于油箱温度。系统中任何位置的温度都不可高于 115 °C。
如果由于外部工作参数导致无法满足上述条件，请咨询我们。
The case drain temperature, which is affected by pressure and speed, is always higher than the tank temperature. At no point in the system may the temperature be higher than 115°C.
If the above conditions cannot be maintained due to extreme operating parameters, please contact us.

过滤 Filtration

过滤越精细，液压油的清洁度水平就越高，轴向柱塞元件的使用寿命就越长。
为了确保轴向柱塞元件的功能可靠性，液压油的清洁度必须至少达到ISO 4406 标准要求的 20/18/15 级。
当油液温度非常高时 (90 °C 至最高 115 °C，不适用于 250 至 1000)，清洁度水平至少应达到 ISO 4406 标准要求的 19/17/14 级。

如果无法满足上述水平，请与我们联系。
The finer the filtration, the higher the cleanliness level of the hydraulic fluid and the longer the service life of the axial piston unit.
To ensure functional reliability of the axial piston unit, the hydraulic fluid must have a claenliness level of at least
20/18/15 according to ISO 4406.
At very high hydraulic fluid temperatures (90°C to max. 115°C, not permitted for sizes 250 to 1000) at least cleanliness level
19/17/14 according to ISO 4406 is required.
If the above classes cannot be observed, please contact us.

工作压力范围 Operating pressure range

入口 Inlet

油口 S (吸油口) 处的绝对压力
*不带*加注泵型号
Absolute pressure at port S (suction port)
Version *without* charge pump

$p_{abs\ min}$ _____ 0.8 bar
$p_{abs\ max}$ _____ 30 bar

如果压力 > 5 bar，请咨询我们。
*带有*加注泵的型号

If the pressure is > 5 bar, please ask.
Version *with* charge pump

$p_{abs\ min}$ _____ 0.6 bar
$p_{abs\ max}$ _____ 2 bar

最大允许转速 (转速限制) Maximum permissible speed (speed limit)

通过增加吸油口 S 处的入口压力 p_{abs} 而允许的转速或 $V_g \le V_{g\ max}$

Permissible speed by increasing the inlet pressure p_{abs} at the suction port S or at $V_g \le V_{g\ max}$

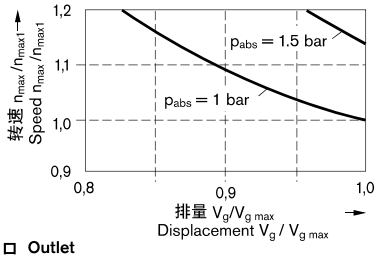

出口 Outlet

油口 A 或 B 的压力 Pressure at port A or B

公称压力 Nominal pressure p_N _____ 350 bar
最大压力 Maximum pressure p_{max} _____ 400 bar

公称压力：确保疲劳强度条件下的最大设计压力。
Nominal pressure: Max. design pressure at which fatigue strength is ensured.

最大压力：短时间内 (t < 1 s) 允许出现的最大工作压力。
Maximum pressure: Max. operating pressure which is permissible for short-term (t < 1s).

最小工作压力 Minimum operating pressure

泵工作管路中要求的最小工作压力 $p_{B\ min}$，这取决于转速、摆动角和排量 (参见图表)。
A minimum operating pressure $p_{B\ min}$ is required in the pump service line depending on the speed, the swivel angle and the displacement (see diagram).

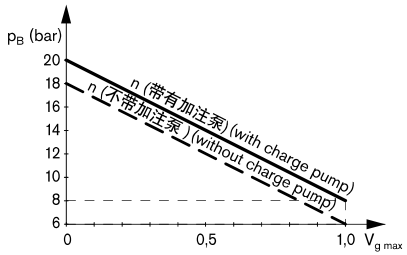

技术参数 Technical Data

壳体泄油压力 Case drain pressure

油口 T_1 和 T_2 处的壳体泄油压力可能比
油口 S 处的入口压力最大高 1.2 bar，但是不会超过
The case drain pressure at the ports T_1 and T_2 may be a maximum of 1.2 bar higher than the inlet pressure at the port S but not higher than

$p_{L\ abs.\ max}$ _____ 2 bar。

需要直接连接至油箱的不受限制的、全尺寸箱体泄油管路。
An unrestricted, full size case drain line directly to tank is required.

轴密封圈的温度范围

Temperature range of the shaft seal ring

FKM 轴密封圈允许的壳体泄油温度为 -25 °C 至 +115 °C。
The FKM shaft seal ring is permissible for case drain temperatures of -25°C to +115°C.

注意 Note:
对于温度低于 -25 °C 的应用场合，请务必使用 NBR 轴密封圈 (允许的温度范围：-40 °C 至 +90 °C)。
按顺序用明文说明 NBR 轴密封圈。

For applications below -25°C, an NBR shaft seal ring is necessary (permissible temperature range: -40°C to +90°C).
State NBR shaft seal ring in clear text in the order.

冲洗壳体 Flushing the case

如果带有控制单元 **EP**、**HD**、**DR** 或行程限位器 (**H.**、**U.**) 的变量泵长时间 (t > 10 min) 以零流量或工作压力 < 15 bar 操作，则有必要通过油口“T_1”、“T_2”或“R”冲洗壳体。
If a variable pump with control unit **EP, HD, DR** or stroke limiter (**H., U.**,) is operated over a long period (t > 10 min) with flow zero or operating pressure < 15 bar, flushing of the case via ports "T_1", "T_2" or "R" is necessary.

规格 Size	40	60	75	95	130	145	190	260
$q_{V\ 冲洗 flush}$ (l/min)	2	3	3	4	4	4	5	6

在带有加注泵 (LA11VO)的型号中没有必要冲洗壳体，因为加注流量的一部分被引向壳体。

Flushing the case is unnecessary in versions with charge pump (LA11VO), since a part of the charge flow is directed to the case.

加注泵 (叶轮) Charge pump (impeller)

加注泵为循环泵，通过它加注 LA11VLO 规格 130...260)，因此可以更高转速操作。这也简化了低温和高液压油粘度时的冷启动。因此，在大多数情况下没有必要进行油箱加注。使用加注泵允许最大 2 bar 的油箱压力。

The charge pump is a circulating pump with which the LA11VLO (size 130...260) is filled and therefore can be operated at higher speeds. This also simplifies cold starting at low temperatures and high viscosity of the hydraulic fluid. Tank charging is therefore unnecessary in most cases. A tank pressure of a max. 2 bar is permissible with charge pump.

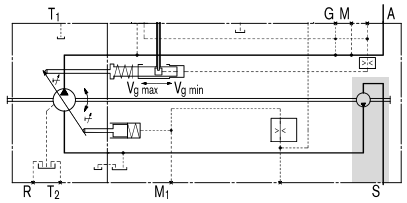

技术参数 Technical Data

数据表 (理论值，不包括系数和公差；近似值) **Table of values** (theoretical values, without efficiency and tolerances; values rounded)

规格 Size	LA11VO		40	60	75	95	130	145	190	260
排量 Displacement	$V_{g\ max}$	cm^3	42	58.5	74	93.5	130	145	193	260
	$V_{g\ min}$	cm^3	0	0	0	0	0	0	0	0
转速 Speed $V_{g\ max}$ 1) 时的最大值 maximum at $V_{g\ max}$ 1)	n_{max}	rpm	3000	2700	2550	2350	2100	2200	2100	1800
$V_g \le V_{g\ max}$ 3) 时的最大值 maximum at $V_g \le V_{g\ max}$ 3)	n_{max1}	rpm	3500	3250	3000	2780	2500	2500	2100	2300
n_{max} 和 $V_{g\ max}$ 时的流量 Flow at n_{max} and $V_{g\ max}$	$q_{v\ max}$	l/min	126	158	189	220	273	319	405	468
$q_{v\ max}$ 和 $\Delta p = 350$ bar 时的功率 Power at $q_{v\ max}$ and $\Delta p = 350$ bar	P_{max}	kW	74	92	110	128	159	186	236	273
$V_{g\ max}$ 和 $\Delta p = 350$ bar 时的扭矩 Torque at $V_{g\ max}$ and $\Delta p = 350$ bar	T_{max}	Nm	234	326	412	521	724	808	1075	1448
转动刚度 Rotary stiffness	Z 轴 shaft	Nm/rad	88894	102440	145836	199601	302495	302495	346190	686465
	P 轴 shaft	Nm/rad	87467	107888	143104	196435	312403	312403	383292	653835
	S 轴 shaft	Nm/rad	58347	86308	101921	173704	236861	236861	259773	352009
	T 轴 shaft	Nm/rad	74476	102440	125603	–	–	–	301928	567115
转子组的转动惯量 Moment of inertia for rotary group	J_{TW}	kgm^2	0.0048	0.0082	0.0115	0.0173	0.0318	0.0341	0.055	0.0878
最大角加速度 4) Angular acceleration, max. 4)	α	rad/s^2	22000	17500	15000	13000	10500	9000	6800	4800
加注容量 Filling capacity	V	l	1.1	1.35	1.85	2.1	2.9	2.9	3.8	4.6
质量 (近似值) Mass (approx.)	m	kg	32	40	45	53	66	76	95	125

规格 Size	LA11VLO (带有加注泵) (with charge pump)		130	145	190	260
排量 Displacement	$V_{g\ max}$	cm^3	130	145	193	260
	$V_{g\ min}$	cm^3	0	0	0	0
转速 Speed $V_{g\ max}$ 2) 时的最大值 maximum at $V_{g\ max}$ 2)	n_{max}	rpm	2500	2500	2500	2300
$V_g \le V_{g\ max}$ 3) 时的最大值 maximum at $V \le V$ 3)	n_{max1}	rpm	2500	2500	2500	2300
n_{max} 和 $V_{g\ max}$ 时的流量 Flow at n_{max} and $V_{g\ max}$	$q_{v\ max}$	l/min	325	363	483	598
$q_{v\ max}$ 和 $\Delta p = 350$ bar 时的功率 $q_{v\ max}$ and $\Delta p = 350$ bar	P_{max}	kW	190	211	281	349
$V_{g\ max}$ 和 $\Delta p = 350$ bar 时的扭矩	T_{max}	Nm	724	808	1075	1448
转动刚度 Rotary stiffness	Z 轴 shaft	Nm/rad	302495	302495	346190	686465
	P 轴 shaft	Nm/rad	312403	312403	383292	653835
	S 轴 shaft	Nm/rad	236861	236861	259773	352009
	T 轴 shaft	Nm/rad	–	–	301928	567115
转子组的转动惯量 Moment of inertia for rotary group	J_{TR}	kgm^2	0.0337	0.036	0.0577	0.0895
最大角加速度 4) Angular acceleration, max. 4)	α	rad/s^2	10500	9000	6800	4800
加注容量 Filling capacity	V	l	2.9	2.9	3.8	4.6
质量 (近似值) Mass (approx.)	m	kg	72	73	104	138

LA11VO 轴向柱塞变量泵
Axial piston variable pump

1) 数值适用于绝对压力 (p_{abs}) 1 bar 下的吸油口 S 和矿物质液压流体。
2) 数值适用于绝对压力 (p_{abs}) 至少 0.8 bar 下的吸油口 S 和矿物质液压流体。
3) 数值适用于 $V_g \leq V_{g\,max}$ 或吸油口 S 的入口压力 p_{abs} 增加情况下 (参见第153 页的图表)
4) – 有效区域在 0 和最大允许转速之间。它适用于外部激励 (例如发动机转动频率为原来 2–8 倍，万向节轴转动频率为原来两倍)。
– 极限值仅适用于单级泵。 – 必须考虑连接件上的负载。
小心：超过允许的限值可能导致轴向柱塞元件功能损失、使用寿命缩短或部件损坏。允许值可以通过计算确定。
1) The values apply at absolute pressure (p_{abs}) 1 bar at the suction port S and mineral hydraulic fluid.
2) The values apply at absolute pressure (p_{abs}) of at least 0.8 bar at the suction port S and mineral hydraulic fluid.
3) The values apply at $V_g \leq V_{g\,max}$ or in case of an increase in the inlet pressure p_{abs} at the suction port S (see diagram page 153)
4) – The area of validity is situated between 0 and the maximum permissible speed.
It applies for external stimuli (e.g. engine 2-8 times rotary frequency, cardan shaft twice the rotary frequency).
– The limit value applies for a single pump only.
– The loading on the connection parts has to be considered.
Caution: Exceeding the permissible limit values could cause a loss of function, reduced service life or the destruction of the axial piston unit. The permissible values can be determined by calculation.

技术参数 Technical Data

传动轴的允许轴向和径向负载 Permissible radial and axial loading on drive shaft

所述数值为最大值，不允许用于连续运行 The values stated are maximum data and not permissible for continuous operation

规格 Size		规格	40	60	75	95	130	145	190	260
最大径向力，距离为 a、b、c (距轴肩) Radial force, max. at distance a, b, c (from shaft collar)	$F_{q\,max}$	N	3600	5000	6300	8000	11000	11000	16925	22000
	a	mm	17.5	17.5	20	20	22.5	22.5	26	29
	$F_{q\,max}$	N	2891	4046	4950	6334	8594	8594	13225	16809
	B	mm	30	30	35	35	40	40	46	50
	$F_{q\,max}$	N	2416	3398	4077	5242	7051	7051	10850	13600
	c	mm	42.5	42.5	50	50	57.5	57.5	66	71
最大轴向力 Axial force, max.	$\pm F_{ax\,max}$	N	1500	2200	2750	3500	4800	4800	6000	4150

允许的输入扭矩和通轴驱动扭矩 Permissible input and through drive torques

规格 Size		规格 Size	40	60	75	95	130	145	190	260
扭矩(在 $V_{g\,max}$ 和 $\Delta p = 350$ bar 1)) Torque (at $V_{g\,max}$ and $\Delta p = 350$ bar 1))	T_{max}	Nm	234	326	412	521	724	808	1075	1448
最大输入扭矩 2) 在 P 轴端 轴键 DIN 6885 Input torque, max. 2) at shaft end P Shaft key DIN 6885	$T_{E\,perm.}$	Nm	468 ø32	648 ø35	824 ø40	1044 ø45	1448 ø50	1448 ø50	2226 ø55	2787 ø60
在 Z 轴端 at Z shaft end DIN 5480	$T_{E\,perm.}$	Nm	912 W35	912 W35	1460 W40	2190 W45	3140 W50	3140 W50	3140 W50	5780 W60
在 S 轴端 ANSI B92.1a-1976 (SAE J744)	$T_{E\,perm.}$	Nm	314 1 in	602 1 1/4 in	602 1 1/4 in	1640 1 3/4 in	1640 1 3/4 in	1640 1 3/4 in	1640 1 3/4 in	1640 1 3/4 in
在 T 轴端 at S shaft end ANSI B92.1a-1976 (SAE J744)	$T_{E\,perm.}$	Nm	602 1 1/4 in	970 1 3/8 in	970 1 3/8 in	– –	– –	– –	2670 2 in	4070 2 1/4 in
最大通轴驱动扭矩 3) Through drive torque, max. 3)	$T_{D\,perm.}$	Nm	314	521	660	822	1110	1110	1760	2065

1) 没有考虑效率
2) 用于没有径向力的驱动轴
3) 注意轴 **S** 的最大输入扭矩！

1) Efficiency not considered
2) For drive shafts with no radial force
3) Observe max. input torque for shaft **S**!

LA11VO 轴向柱塞变量泵 Axial piston variable pump

扭矩分配 Torque distribution

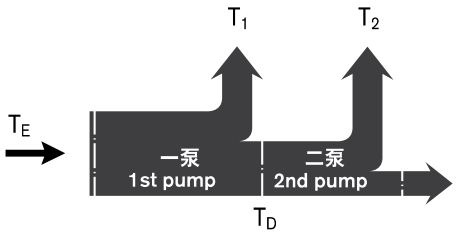

确定公称值 Determining the nominal value

流量 Flow $q_v = \frac{V_g \cdot n \cdot \eta_v}{1000}$ l/min

扭矩 Torque $T = \frac{V_g \cdot \Delta p}{20 \cdot \pi \cdot \eta_{mh}}$ Nm

功率 Power $P = \frac{2\pi \cdot T \cdot n}{60{,}000} = \frac{q_v \cdot \Delta p}{600 \cdot \eta_t}$ kW

V_g = 每转排量 (cm^3)
Δp = 压差 (bar)
n = 转速 (rpm)
η_v = 容积效率
η_{mh} = 机械 – 液压效率
η_t = 总效率 ($\eta_t = \eta_v \cdot \eta_{mh}$)

V_g = Displacement per revolution in cm^3
Δp = Differential pressure in bar
n = Speed in rpm
η_v = Volumetric efficiency
η_{mh} = Mechanical-hydraulic efficiency
η_t = Overall efficiency ($\eta_t = \eta_v \cdot \eta_{mh}$)

LR – 功率控制 Power Control

功率控制器根据工作压力调节泵的排量，从而在恒定传动速度下不会超过规定的驱动功率。

The power control regulates the displacement of the pump depending on the operating pressure so that a given drive power is not exceeded at constant drive speed.

$p_B \cdot V_g$ = 常数 constant　p_B = 工作压力 operating pressure　V_g = 排量 displacement

使用双曲线特性的精确控制能够实现可用功率的最佳利用。

工作压力通过测量活塞作用于摇杆。外部可调的弹簧力与此相抵消，它决定功率设置。

如果工作压力超过弹簧的设置力，摇杆驱动控制阀且泵转回(朝向 $V_{g\,min}$)。摇杆长度缩短，工作压力的增加量与排量的降低量相同，同时不会超过驱动功率 ($p_B \cdot V_g$ = 常数)。

液压输出功率 (LR 特性) 受泵效率的影响。

The precise control with a hyperbolic control characteristic, provides an optimum utilization of available power.

The operating pressure acts on a rocker via a measuring piston. An externally adjustable spring force counteracts this, it determines the power setting.

If the operating pressure exceeds the set spring force, the control valve is actuated by the rocker, the pump swivels back (direction $V_{g\,min}$). The lever length at the rocker is shortened and the operating pressure can increase at the same rate as the displacement decreases without the drive powers being exceeded ($p_B \cdot V_g$ = constant).

The hydraulic output power (characteristic LR) is influenced by the efficiency of the pump.

按顺序用明文说明：　State in clear text in the order:

- 驱动功率 P (kW)　– drive power P in kW
- 传动速度 n (rpm)　– drive speed n in rpm
- 最大流量 $q_{V\,max}$ (l/min)　– max. flow $q_{V\,max}$ in l/min

注明详细要求后，我们的电脑可生成功率图。

After clarifying the details a power diagram can be created by our computer.

LR 特性　Characteristic LR

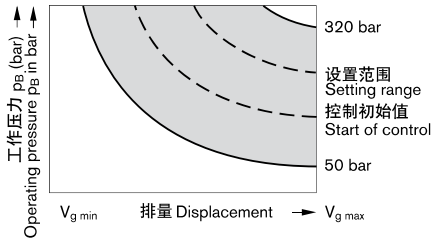

LR 油路图 Circuit diagram LR

规格 Size 40 ... 145

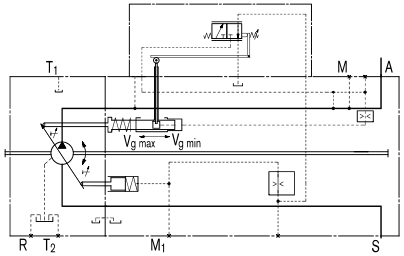

规格 Size 190 ... 260

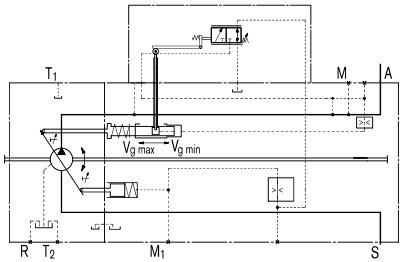

LR – 功率控制

LRD　带有压力切断的功率控制

当达到压力设置时，压力切断对应将泵排量调节回 $V_{g\,min}$ 的压力控制。

该功能越权控制功率控制，即低于预置压力值时，功率功能生效。

压力切断功能集成在泵控制模块中，并在出厂前预置到规定值。

设置范围从 50 到 350 bar

LRD 特性　Characteristic LRD

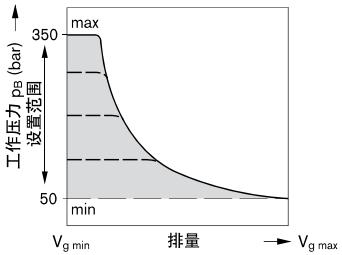

LRD 油路图　Circuit diagram LRD

规格 40...145　Size 40...145

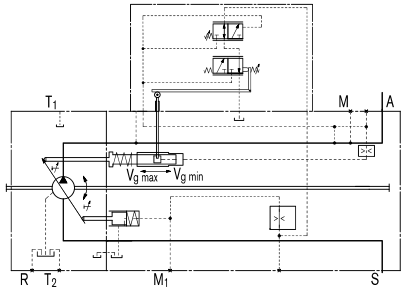

规格 190...260　Size 190...260

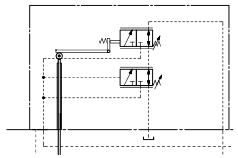

LR – Power Control

LRD　Power control with pressure cut-off

The pressure cut-off corresponds to a pressure control which adjusts the pump displacement back to $V_{g\,min}$, when the pressure setting is reached.

This function overrides the power control, i.e. below the preset pressure value, the power function is effective.

The pressure cut-off function is integrated into the pump control module and is preset to a specified value at the factory.

Setting range from 50 to 350 bar

规格 190...260　Size 190...260

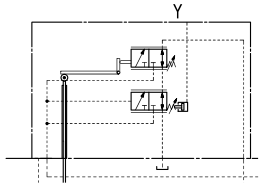

LRG　带有压力切断的功率控制，液压远程控制

有关说明和特性参见第164页 (远程压力控制，DRG)

LRG　Power control with pressure cut-off, hydraulically remote controlled

See page 164 for description and characteristic (pressure control remote controlled, DRG)

LR – 功率控制

LRDS 带有压力切断和负载感应的功率控制

负载感应控制器是一个作为负载压力函数运行的流量控制选件，以根据执行机构流量需求调节泵排量。
该流量取决于安装在泵出口和执行机构之间的外部感应节流孔 (1) 的横截面。该流量与低于功率曲线和压力切断设置以及泵控制范围内的负载压力无关。
感应节流孔通常为一个单独布置的负载感应方向阀 (控制块)。方向阀活塞的位置决定了感应节流孔的开口横截面，从而决定了泵的流量。
负载感应控制比较感应节流孔前后的压力，并维持通过孔的压降 (压差 Δp)，从而使泵流量保持恒定。
如果感应孔处的压差 Δp 增大，泵则转回 (朝向 $V_{g\,min}$)，而如果压差 Δp 减小，则泵转出 (朝向 $V_{g\,max}$)，直到阀内感应孔上的压降恢复。

$\Delta p_{孔} = p_{泵} - p_{执行器}$

Δp 的设置范围在 14 bar 和 25 bar 之间。

标准压差设置为 18 bar。(订购时，请以明文形式注明)。

零行程运行 (感应节流孔堵上) 时的备用压力略高于 Δp 设置值。

在标准 LS 系统中，压力切断装置集成在泵控制器中。在 LUDV (流量共用) 系统中，压力切断装置内置在 LUDV 控制模块中。

(1) 感应节流孔 (控制块) 不在泵供应范围内。

特性 LRDS Characteristic LRDS

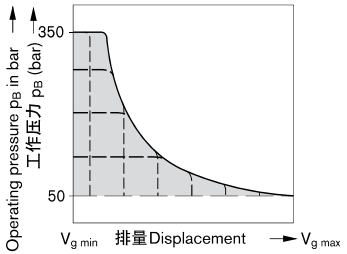

油路图 LRDS
Circuit diagram LRDS
规格 40 ... 145
Size 40 ... 145

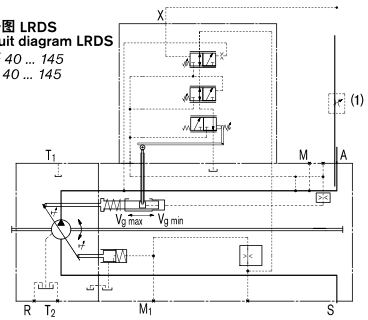

规格 190 ... 260
Size 190...260

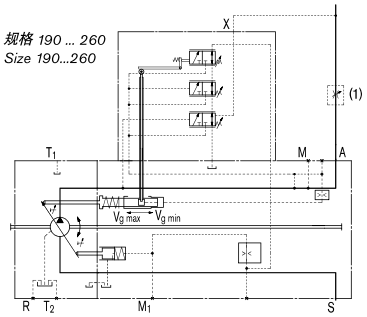

LR – Power Control

LRDS Power control with pressure cut-off and load sensing

The load sensing control is a flow control option that operates as a function of the load pressure to regulate the pump displacement to match the actuator flow requirement.

The flow depends here on the cross section of the external sensing orifice (1) fitted between the pump outlet and the actuator. The flow is independent of the load pressure below the power curve and the pressure cut-off setting and within the control range of the pump.

The sensing orifice is usually a separately arranged load sensing directional valve (control block). The position of the directional valve piston determines the opening cross section of the sensing orifice and thus the flow of the pump.

The load sensing control compares pressure before and after the sensing orifice and maintains the pressure drop across the orifice (differential pressure Δp) and with it the pump flow constant.

If the differential pressure Δp increases at the sensing orifice, the pump is swivelled back (towards $V_{g\,min}$), and, if the differential pressure Δp decreases, the pump is swivelled out (towards $V_{g\,max}$) until the pressure drop across the sensing orifice in the valve is restored.

$\Delta p_{orifice} = p_{pump} - p_{actuator}$

The setting range for Δp is between 14 bar and 25 bar.

The standard differential pressure setting is 18 bar. (Please state in clear text when ordering).

The stand-by pressure in zero stroke operation (sensing orifice plugged) is slightly above the Δp setting.

In a standard LS system the pressure cut-off is integrated in the pump control. In a LUDV (flow sharing) system the pressure cut-off is integrated in the LUDV control block.

(1) The sensing orifice (control block) is not included in the pump supply.

NVICKS® 威克斯液压 VICKS HYDRAULIC

LA11VO 轴向柱塞变量泵 Axial piston variable pump

LR – 功率控制

LR... 带行程限位器的功率控制

行程限位器可用于在整个控制范围上连续改变或限制泵排量。排量使用作用至油口 Y 的先导压力 p_{St} (最大 40 bar) 在 LRH 中或通过作用至比例电磁铁的控制电流在 LRU 中设置。需要 12 V (U1) 或 24 V (U2) 的直流电来控制比例电磁铁。

功率控制超越行程限位器控制进行越权控制，即低于双曲线功率特性时，排量由控制电流或先导压力控制。当设置流量或负载压力超过功率特性时，功率控制越权控制并遵循双曲线特性减小排量。

为了允许泵排量控制从其起始位置 $V_{g\,max}$ 到 $V_{g\,min}$ 操作，电子行程限位器 LRU1/2 和液压行程限位器 LRH2/6 需要 30 bar 的最小控制压力。

所需控制压力来自负载压力或外部施加给 G 油口的控制压力。

为了确保在低工作压力下行程限位器也能工作，必须为油口 G 提供大约 30 bar 的外部控制压力。

注意：
如果没有在 G 处连接外部控制压力，应该拆卸梭阀。

注意

控制器中的弹簧复位装置并非安全设备

控制器中的滑阀可能会被内部异物 (液压油杂质、系统组件磨损或沉积物) 卡在不确定位置。从而，轴向柱塞元件无法再供应操作员指定的流量。

检查是否需要在您的机器上采取补救措施，以将驱动执行器移至安全位置 (如紧急停机)。

LR – Power Control

LR... Power control with stroke limiter

The stroke limiter can be used to vary or limit the displacement of the pump continuously over the whole control range. The displacement is set in LRH with the pilot pressure p_{St} (max. 40 bar) applied to port Y or in LRU by the control current applied to the proportional solenoid. A DC current of 12V (U1) or 24V (U2) is required to control the proportional solenoid.

The power control overrides the stoke limiter control, i.e. below the hyperbolic power characteristic, the displacement is controlled by the control current or pilot pressure. When exceeding the power characteristic with a set flow or load pressure, the power control overrides and reduces the displacement following the hyperbolic characteristic.

To permit operation of the pump displacement control from its starting position $V_{g\,max}$ to $V_{g\,min}$, a minimum control pressure of 30 bar is required for the electric stroke limiter LRU1/2 and the hydraulic stroke limiter LRH2/6.

The required control pressure is taken either from the load pressure, or from the externally applied control pressure at the G port.

To ensure functioning of the stroke limiter even at low operating pressure, port G must be supplied with external control pressure of approx. 30 bar.

Note:
If no external control pressure is connected at G, the shuttle valve must be removed.

Note

The spring return feature in the controller is not a safety device

The spool valve inside the controller can get stuck in an undefined position by internal contamination (contaminated hydraulic fluid, abrasion or residual contamination from system components). As a result, the axial piston unit can no longer supply the flow specified by the operator.

Check whether your application requires that remedial measures be taken on your machine in order to bring the driven consumer into a safe position (e.g. immediate stop).

DR – 压力控制

DR 压力控制

即使在流量变化情况下，压力控制也能在其控制范围内保持液压系统内的压力稳定。变量泵只提供执行器所需的液压油。如果工作压力超过在内置压力控制阀中设置的设定点，泵排量自动摆回，直到压力偏差得到校正。

卸压状态的起始位置：$V_{g\,max}$

设置范围从 50 到 350 bar。

DR – Pressure Control

DR Pressure control

The pressure control keeps the pressure in a hydraulic system constant within its control range even under varying flow conditions. The variable pump only moves as much hydraulic fluid as is required by the actuators. If the operating pressure exceeds the setpoint set at the integral pressure control valve, the pump displacement is automatically swivelled back until the pressure deviation is corrected.

Starting position in depressurized state: $V_{g\,max}$

Setting range from 50 to 350 bar.

特性：DR Characteristic: DR

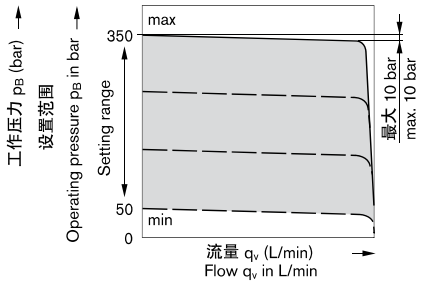

油路图 DR Circuit diagram DR

规格 40 ... 145
Size 40 ... 145

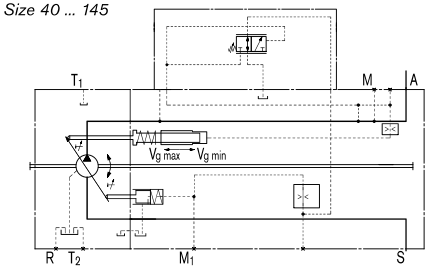

规格 190 ... 260
Size 190 ... 260

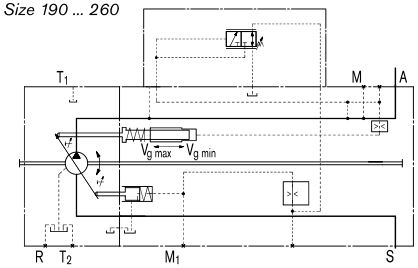

DR – 压力控制

DRS 带负载感应的压力控制

负载感应控制器是一个作为负载压力函数运行的流量控制选件，以根据执行机构流量需求调节泵排量。

该流量取决于安装在泵出口和执行机构之间的外部感应节流孔 (1) 的横截面。该流量与低于压力切断设置以及泵控制范围内的负载压力无关。

感应节流孔通常为一个单独布置的负载感应方向阀 (控制块)。方向阀活塞的位置决定了感应节流孔的开口横截面，从而决定了泵的流量。

负载感应控制比较感应节流孔前后的压力，并维持通过孔的压降 (压差 Δp)，从而使泵流量保持恒定。

如果感应孔处的压差 Δp 增大，泵则转回 (朝向 $V_{g\,min}$)，而如果压差 Δp 减小，则泵转出 (朝向 $V_{g\,max}$)，直到阀内感应孔上的压降恢复。

$\Delta p_{孔} = p_{泵} - p_{执行器}$

Δp 的设置范围在 14 bar 和 25 bar 之间。

标准压差设置为 18 bar。(订购时，请以明文形式注明)。

零行程运行 (感应节流孔堵上) 时的备用压力略高于 Δp 设置值。

(1) 感应节流孔 (控制块) 不在泵供应范围内。

特性：DRS Characteristic: DRS

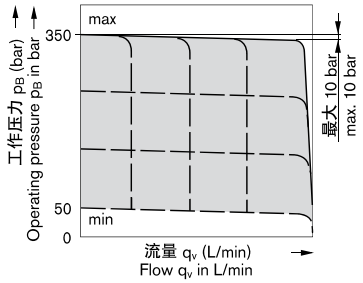

DRS 油路图
Circuit diagram DRS

规格 40 ... 145
Size 40 ... 145

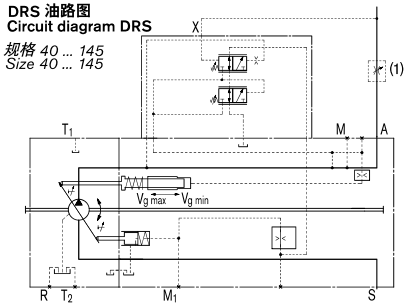

DR – Pressure Control

DRS Pressure control with load sensing

The load sensing control is a flow control option that operates as a function of the load pressure to regulate the pump displacement to match the actuator flow requirement.

The flow depends here on the cross section of the external sensing orifice (1) fitted between the pump outlet and the actuator. The flow is independent of the load pressure below the pressure cut-off setting and within the control range of the pump.

The sensing orifice is usually a separately arranged load sensing directional valve (control block). The position of the directional valve piston determines the opening cross section of the sensing orifice and thus the flow of the pump.

The load sensing control compares pressure before and after the sensing orifice and maintains the pressure drop across the orifice (differential pressure Δp) and with it the pump flow constant.

If the differential pressure Δp increases at the sensing orifice, the pump is swivelled back (towards $V_{g\,min}$), and, if the differential pressure Δp decreases, the pump is swivelled out (towards $V_{g\,max}$) until the pressure drop across the sensing orifice in the valve is restored.

$\Delta p_{orifice} = p_{pump} - p_{actuator}$

The setting range for Δp is between 14 bar and 25 bar.

The standard differential pressure setting is 18 bar. (Please state in clear text when ordering).

The stand-by pressure in zero stroke operation (sensing orifice plugged) is slightly above the Δp setting.

(1) The sensing orifice (control block) is not included in the pump supply.

规格 190 ... 260
Size 190 ... 260

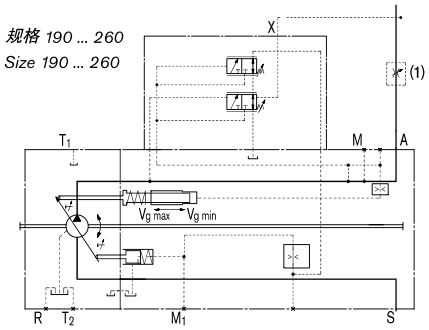

DR – 压力控制

DRG 远程压力控制

远程控制压力切断调节器可以通过远程安装的压力阀 (1) 调节压力设置。此阀的先导流量通过控制模块中的固定节流孔提供。

设置范围从 50 到 350 bar。

此外，通过外部安装的 2/2 路方向阀 (2) 可以将泵卸载到备用压力状态。

两个功能可以单独使用或组合使用 (参见油路图)。

外部阀没有随泵一起供应。

作为独立的压力阀 (1)，我们推荐：

DBDH 6 (手动控制)，参见 RC 25402

特性：DRG Characteristic: DRG

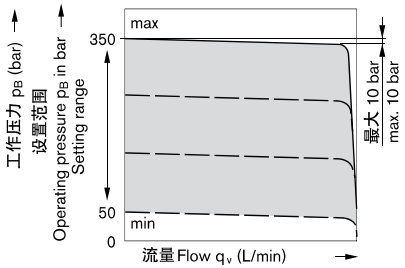

注意：远程控制压力切断也可以与 LR、HD 和 EP 组合。

Note: The remote controlled pressure cut-off is also possible in combination with LR, HD and EP.

DRG 油路图

规格 40 ... 145

Circuit diagram DRG

Size 40 ... 145

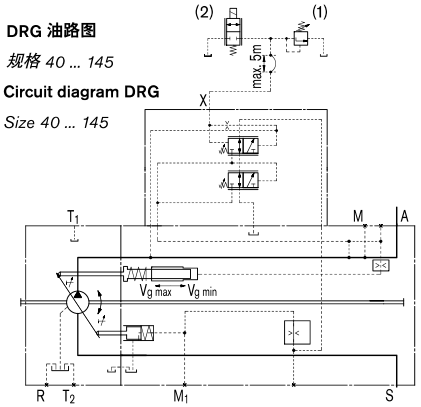

规格 190 ... 260

Size 190 ... 260

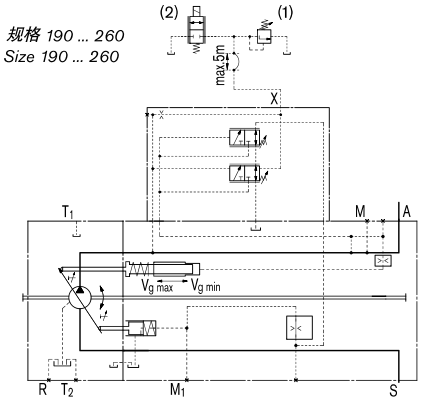

DR – Pressure Control

DRG Pressure control, remote controlled

The remote control pressure cut-off regulator permits the adjustment of the pressure setting by a remotely installed pressure relief valve (1). Pilot flow for this valve is provide by a fixed orifice in the control module.

Setting range from 50 to 350 bar.

In addition the pump can be unloaded into a standby pressure condition by an externally installed 2/2-way directional valve (2).

Both functions can be used individually or in combination (see circuit diagram).

The external valves are not included in the pump supply.

As a separate pressure relief valve (1) we recommend:

DBDH 6 (manual control), see RE 25402

规格尺寸Dimensions, Size 40

DRS/DRG

带有负载感应控制的压力控制远程压力控制

Pressure control with load sensing control

Pressure control remote controlled

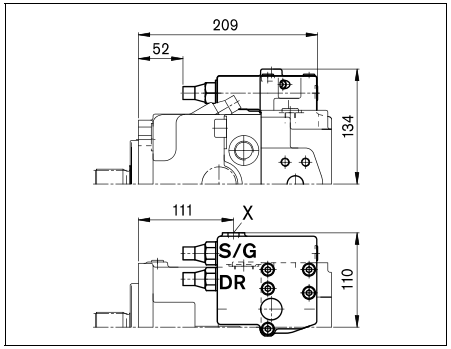

规格尺寸 Dimensions, Size 60

DRS/DRG

远程压力控制带有负载感应控制的压力控制

Pressure control with load sensing control

Pressure control remote controlled

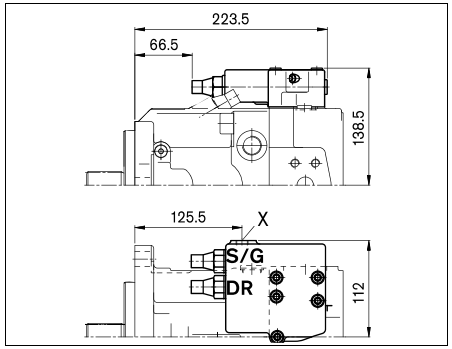

规格尺寸 Dimensions, Size 75

DRS/DRG

带有负载感应控制的压力控制远程压力控制

Pressure control with load sensing control

Pressure control remote controlled

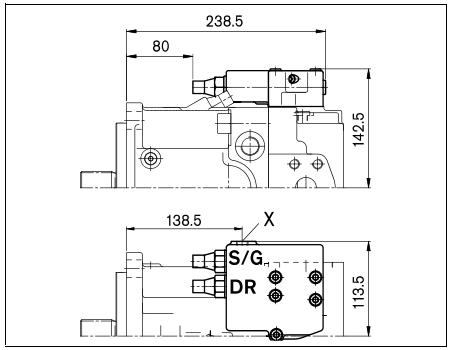

规格尺寸 Dimensions, Size 95

DRS/DRG

带有负载感应控制的压力控制远程压力控制

Pressure control with load sensing control

Pressure control remote controlled

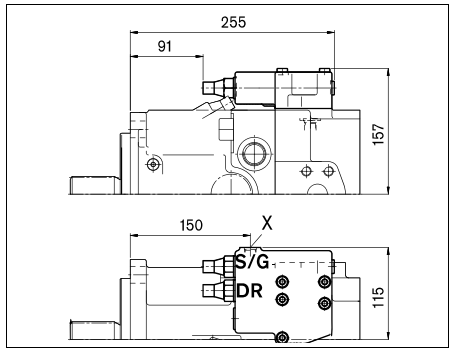

规格尺寸 Dimensions, Size 130/145

DRS/DRG

带有负载感应控制的压力控制远程压力控制

Pressure control with load sensing control

Pressure control remote controlled

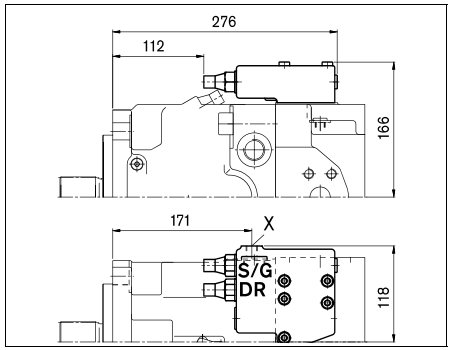

规格尺寸 Dimensions, Size 190

DRS/DRG

带有负载感应控制的压力控制远程压力控制

Pressure control with load sensing control

Pressure control remote controlled

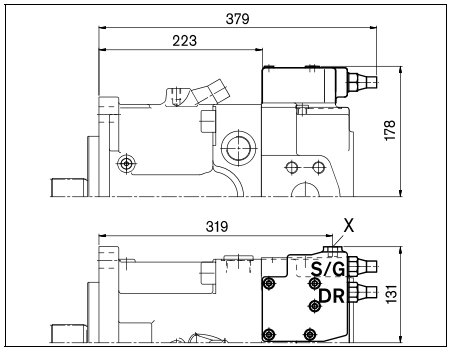

规格尺寸 Dimensions, Size 260

DRS/DRG

带有负载感应控制的压力控制远程压力控制

Pressure control with load sensing control

Pressure control remote controlled

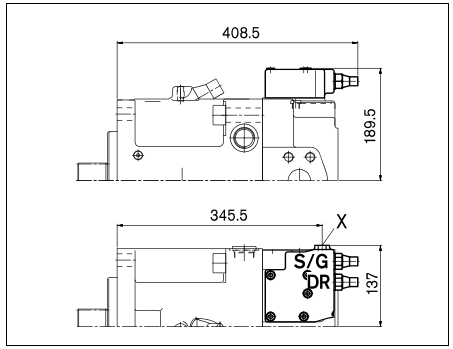

规格尺寸 Dimensions, Size 40

在完成最终设计之前，请索取经审核的图纸。
尺寸以 mm 为单位。

Before finalizing your design, please request a certified drawing. Dimensions in mm.

LRDS

带有压力切断 D和负载感应控制 S 的功率控制 LR

Power control LR with pressure cut-off D and load sensing control S

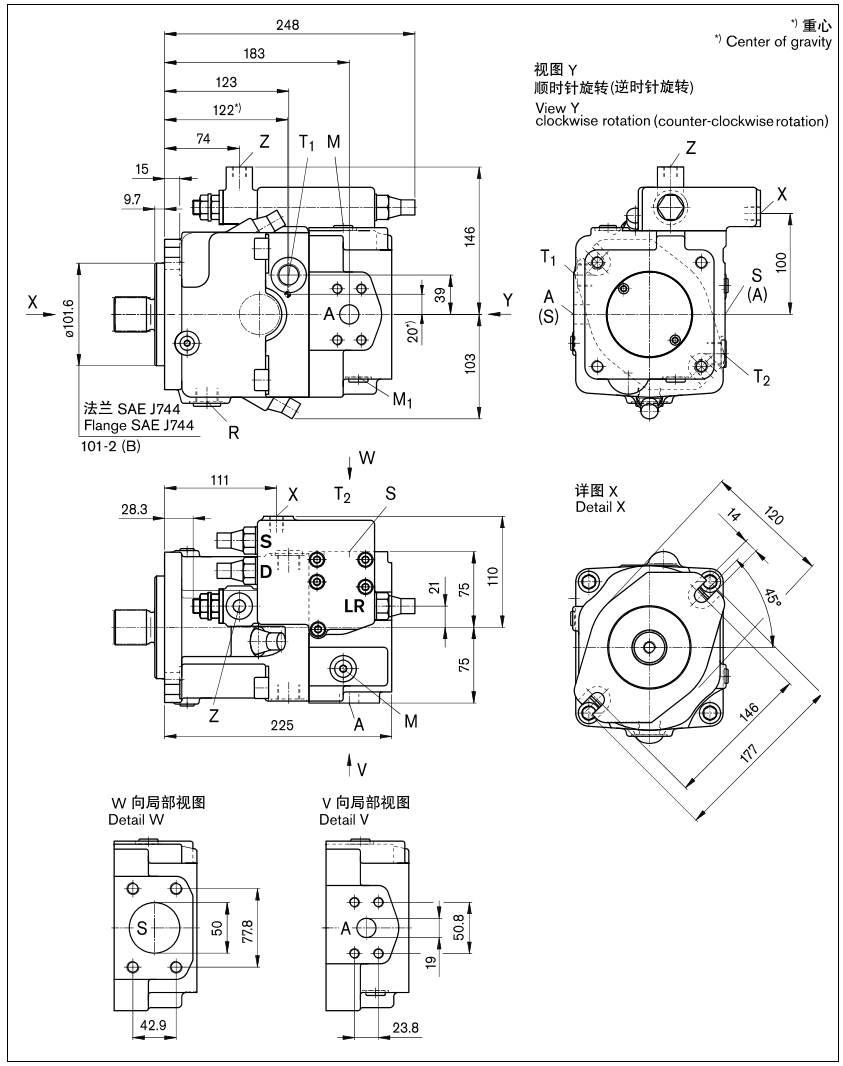

规格尺寸 Dimensions, Size 40

在完成最终设计之前，请索取经审核的图纸。
尺寸以 mm 为单位。
Before finalizing your design, please request a certified drawing. Dimensions in mm.

轴端 Shaft ends

Z 符合 DIN 5480 的花键轴
Splined shaft DIN 5480
W35x2x30x16x9g

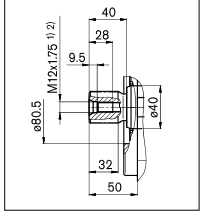

P 符合 DIN 6885 的平键轴
Parallel keyed shaft DIN 6885,
AS10x8x56

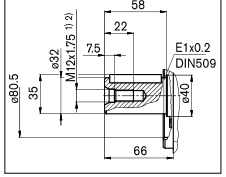

S 花键轴 SAE J744
Splined shaft SAE J744
1 in 15T 16/32 3)

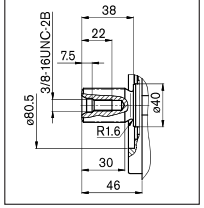

T 花键轴 SAE J744
Splined shaft SAE J744
1 1/4 in 14T 12/24DP 3)

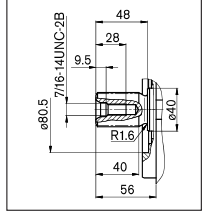

油口 Ports

名称 Designation	函数 Function	标准 Standard	规格 2) Size 2)		最大压力(bar) 4) Max. pressure (bar) 4)	状态 State
A	工作管路油口固定螺纹 Service line port Fixing thread	SAE J518 DIN 13	3/4 in M10x1.5；	16 (深 deep)	400	O
S	吸油口固定螺纹 Suction port Fixing thread	SAE J518 DIN 13	2 in M12x1.75；	17 (深 deep)	30	O
T_1、T_2	回油口 Tank port	DIN 3852	M22x1.5；	14 (深 deep)	10	5)
R	排气口 Air bleed	DIN 3852	M22x1.5；	14 (深 deep)	10	X
M_1	测量点，定位腔体 Measurement point, positioning chamber	DIN 3852	M12x1.5；	12 (深 deep)	400	X
M	测量点，工作管路油口 Measurement point, service line port	DIN 3852	M12x1.5；	12 (深 deep)	400	X
X	先导压力油口 在带有负载感应 (S) 和远程控制压力切断 (G) 的型号中 Pilot pressure port in version with load sensing (S) and remote controlled pressure cut-off (G)	DIN 3852	M14x1.5	12 (深 deep)	400	O
Y	先导压力油口 在带有行程限位器 (H...)、2 级压力切断 (E) 和 HD 的型号中 Pilot pressure port in version with stroke limiter (H...), 2-stage pressure cut-off (E) and HD	DIN 3852	M14x1.5；	12 (深 deep)	40	O
Z	先导压力油口 在带有交叉感应 (C) 和 功率越权控制 (LR3) 功率越权控制 (LG1) 的型号中 Pilot pressure port in version with cross sensing (C) and power override (LR3) power override (LG1)	DIN 3852	M14x1.5；	12 (深 deep)	400 40	O
G	控制压力 (控制器) 油口 在带有行程限位器 (H.., U2)、带有螺纹管接头 GE10 - PLM 的 HD 和 EP 的型号中 (否则关闭) Port for control pressure (controller) in version with stroke limiter (H.., U2), HD and EP with screw union GE10 - PLM (otherwise closed)	DIN 3852	M14x1.5；	12 (深 deep)	40	O

1) 符合 DIN 332 标准的中心孔 (符合 DIN 13 标准的螺纹)
2) 有关最大紧固扭矩，具体情况请参见第187页上的一般说明
3) ANSI B92.1a-1976，30° 压力角，平齿根，侧面配合，公差等级 5
4) 根据调节数据和工作压力
5) 根据安装位置的不同，必须连接 T1 或 T2 (另见第 187 页)
O= 打开，必须连接 (交付时已堵上)
X = 关闭 (在正常运行中)

1) Center bore according to DIN 332 (thread acc. to DIN 13)
2) For max. tightening torque, please refer to general notes on page 187
3) ANSI B92.1a-1976, 30° pressure angle, flat root, side fit, tolerance class 5
4) Depending on adjustment data and operating pressure
5) Depending on installation position, T1 or T2 must be connected (see also page 187)
O= Open, must be connected (closed on delivery)
X = Closed (in normal operation)

规格尺寸 Dimensions, Size 60

在完成最终设计之前，请索取经审核的图纸。
尺寸以 mm 为单位。
Before finalizing your design, please request a certified drawing. Dimensions in mm.

LRDS

带有压力切断 D和负载感应控制 S 的功率控制 LR
Power control LR with pressure cut-off D and load sensing control S

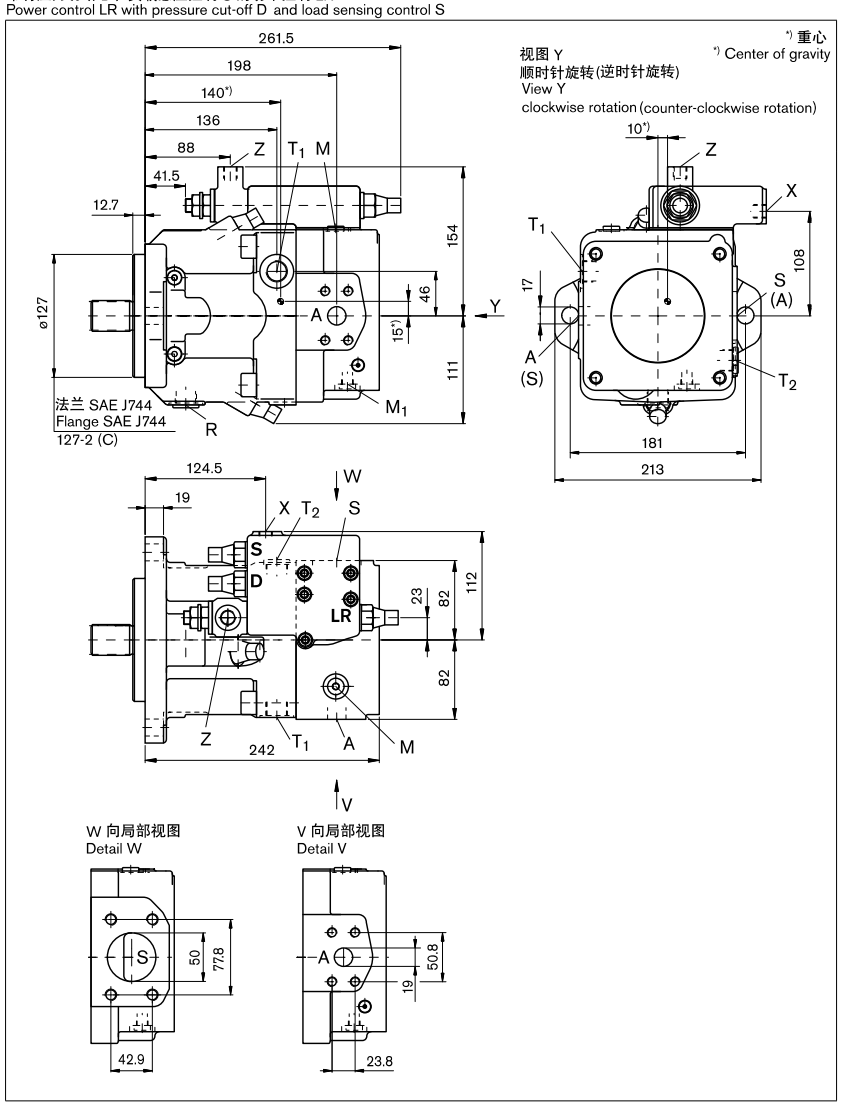

规格尺寸 Dimensions, Size 60

在完成最终设计之前，请索取经审核的图纸。
尺寸以 mm 为单位。
Before finalizing your design, please request a certified drawing. Dimensions in mm.

轴端 Shaft ends

Z 符合 DIN 5480 的花键轴
W35x2x30x16x9g

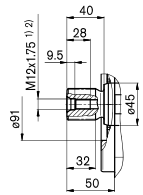

P 符合 DIN 6885 的平键轴
AS10x8x56

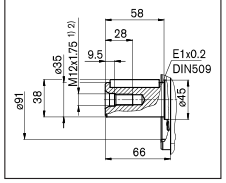

S 花键轴 SAE J744
1 1/4 in 14T 12/24DP 3)

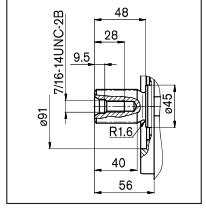

T 花键轴 SAE J744
1 3/8 in 21T 16/32DP 3)

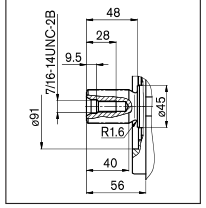

油口 Ports

名称 Designation	函数 Function	标准 Standard	规格 2) Size 2)		最大压力(bar) 4) Max. pressure (bar) 4)	状态 State
A	工作管路油口固定螺纹 Service line port Fixing thread	SAE J518 DIN 13	3/4 in M10x1.5；	17(深 deep)	400	O
S	吸油口固定螺纹 Suction port Fixing thread	SAE J518 DIN 13	2 in M12x1.75；	20(深 deep)	30	O
T_1、T_2	回油口 Tank port	DIN 3852	M22x1.5；	14 (深 deep)	10	5)
R	排气口 Air bleed	DIN 3852	M22x1.5；	14 (深 deep)	10	X
M_1	测量点，定位腔体 Measurement point, positioning chamber	DIN 3852	M12x1.5；	12 (深 deep)	400	X
M	测量点，工作管路油口 Measurement point, service line port	DIN 3852	M12x1.5；	12 (深 deep)	400	X
X	先导压力油口 在带有负载感应 (S) 和远程控制压力切断 (G) 的型号中 Pilot pressure port in version with load sensing (S) and remote controlled pressure cut-off (G)	DIN 3852	M14x1.5	12 (深 deep)	400	O
Y	先导压力油口 在带有行程限位器 (H...)、2 级压力切断 (E) 和 HD 的型号中 Pilot pressure port in version with stroke limiter (H...), 2-stage pressure cut-off (E) and HD	DIN 3852	M14x1.5；	12 (深 deep)	40	O
Z	先导压力油口 在带有交叉感应 (C) 和 功率越权控制 (LR3) 功率越权控制 (LG1) 的型号中 Pilot pressure port in version with cross sensing (C) and power override (LR3) power override (LG1)	DIN 3852	M14x1.5；	12 (深 deep)	400 40	O
G	控制压力 (控制器) 油口 在带有行程限位器 (H.., U2)、带有螺纹管接头 GE10 - PLM 的 HD 和 EP 的型号中 (否则关闭) Port for control pressure (controller) in version with stroke limiter (H.., U2), HD and EP with screw union GE10 - PLM (otherwise closed)	DIN 3852	M14x1.5；	12 (深 deep)	40	O

1) 符合 DIN 332 标准的中心孔 (符合 DIN 13 标准的螺纹)
2) 有关最大紧固扭矩，具体情况请参见第187页上的一般说明
3) ANSI B92.1a-1976，30° 压力角，平齿根，侧面配合，公差等级 5
4) 根据调节数据和工作压力
5) 根据安装位置的不同，必须连接 T1 或 T2 (另见第187页)
O＝打开，必须连接 (交付时已堵上)
X＝关闭 (在正常运行中)

1) Center bore according to DIN 332 (thread acc. to DIN 13)
2) For max. tightening torque, please refer to general notes on page 187
3) ANSI B92.1a-1976, 30° pressure angle, flat root, side fit, tolerance class 5
4) Depending on adjustment data and operating pressure
5) Depending on installation position, T1 or T2 must be connected (see also page 187)
O＝Open, must be connected (closed on delivery)
X＝Closed (in normal operation)

规格尺寸 Dimensions, Size 75

在完成最终设计之前，请索取经审核的图纸。
尺寸以 mm 为单位。
Before finalizing your design, please request a certified drawing. Dimensions in mm.

LRDS

带有压力切断 D 和负载感应控制 S 的功率控制 LR
Power control LR with pressure cut-off D and load sensing control S

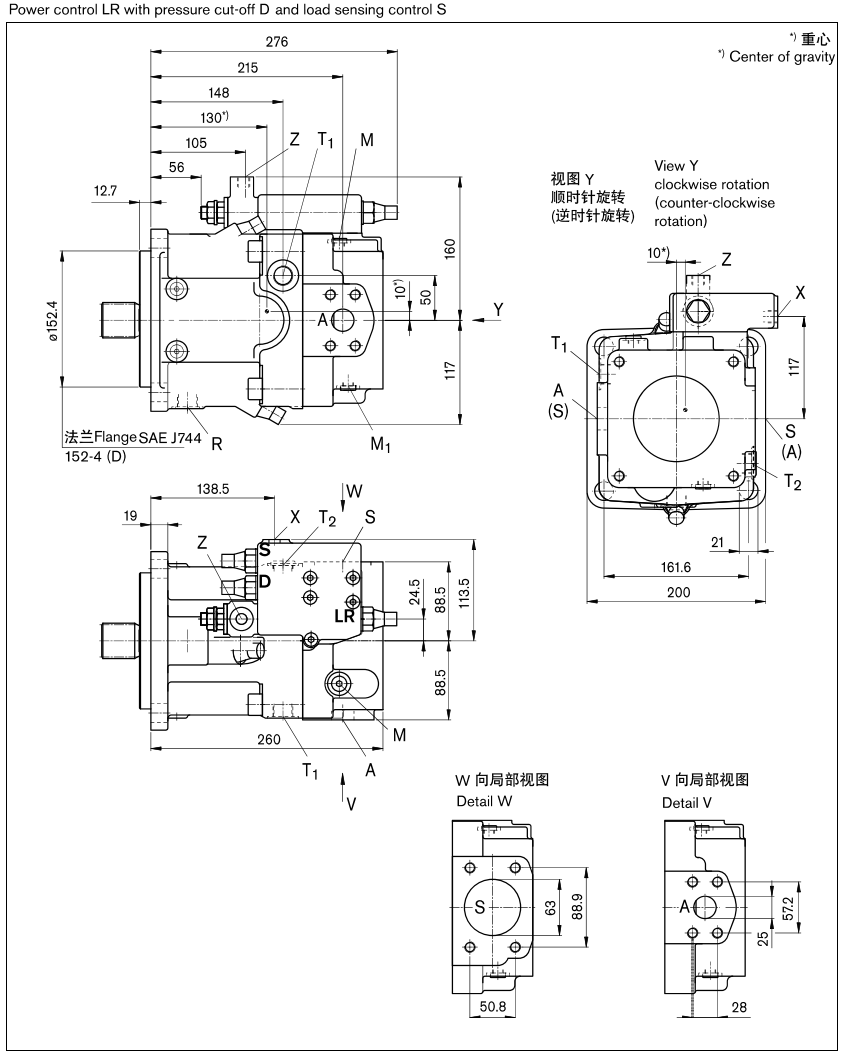

规格尺寸 Dimensions, Size 75

在完成最终设计之前，请索取经审核的图纸。尺寸以 mm 为单位。
Before finalizing your design, please request a certified drawing. Dimensions in mm.

轴端 Shaft ends

Z 符合 DIN 5480 的花键轴
Splined shaft DIN 5480
W40x2x30x18x9g

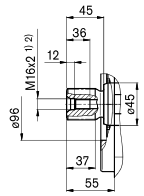

P 符合 DIN 6885 的平键轴
Parallel keyed shaft DIN 6885
AS12x8x80

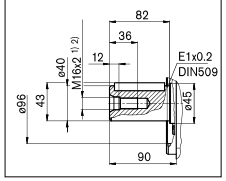

S 花键轴 SAE J744
Splined shaft SAE J744
1 1/4 in 14T 12/24DP 3)

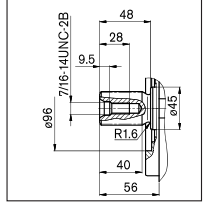

T 花键轴 SAE J744
Splined shaft SAE J744
1 3/8 in 21T 16/32DP 3)

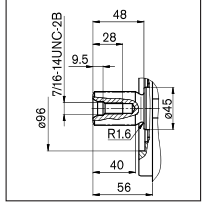

油口 Ports

名称 Designation	函数 Function	标准 Standard	规格 2) Size 2)		最大压力(bar) 4) Max. pressure (bar) 4)	状态 State
A	工作管路油口固定螺纹 Service line port Fixing thread	SAE J518 DIN 13	1 in M12x1.75；	17 (深 deep)	400	O
S	吸油口固定螺纹 Suction port Fixing thread	SAE J518 DIN 13	2 1/2in M12x1.75；	17 (深 deep)	30	O
T_1、T_2	回油口 Tank port	DIN 3852	M22x1.5；	14 (深 deep)	10	5)
R	排气口 Air bleed	DIN 3852	M22x1.5；	14 (深 deep)	10	X
M_1	测量点，定位腔体 Measurement point, positioning chamber	DIN 3852	M12x1.5；	12 (深 deep)	400	X
M	测量点，工作管路油口 Measurement point, service line port	DIN 3852	M12x1.5；	12 (深 deep)	400	X
X	先导压力油口 在带有负载感应 (S) 和远程控制压力切断 (G) 的型号中 Pilot pressure port in version with load sensing (S) and remote controlled pressure cut-off (G)	DIN 3852	M14x1.5	12 (深 deep)	400	O
Y	先导压力油口 在带有行程限位器 (H...)、2 级压力切断 (E) 和 HD 的型号中 Pilot pressure port in version with stroke limiter (H...), 2-stage pressure cut-off (E) and HD	DIN 3852	M14x1.5；	12 (深 deep)	40	O
Z	先导压力油口 在带有交叉感应 (C) 和 功率越权控制 (LR3) 功率越权控制 (LG1) 的型号中 Pilot pressure port in version with cross sensing (C) and power override (LR3) power override (LG1)	DIN 3852	M14x1.5；	12 (深 deep)	400 40	O
G	控制压力 (控制器) 油口 在带有行程限位器 (H.., U2)、带有螺纹管接头 GE10 - PLM 的 HD 和 EP 的型号中 (否则关闭) Port for control pressure (controller) in version with stroke limiter (H.., U2), HD and EP with screw union GE10 - PLM (otherwise closed)	DIN 3852	M14x1.5；	12 (深 deep)	40	O

1) 符合 DIN 332 标准的中心孔 (符合 DIN 13 标准的螺纹)
2) 有关最大紧固扭矩，具体情况请参见第187页上的一般说明
3) ANSI B92.1a-1976，30° 压力角，平齿根，侧面配合，公差等级 5
4) 根据调节数据和工作压力
5) 根据安装位置的不同，必须连接 T1 或 T2 (另见第 187 页)
O= 打开，必须连接 (交付时已堵上)
X = 关闭 (在正常运行中)

1) Center bore according to DIN 332 (thread acc. to DIN 13)
2) For max. tightening torque, please refer to general notes on page 187
3) ANSI B92.1a-1976, 30° pressure angle, flat root, side fit, tolerance class 5
4) Depending on adjustment data and operating pressure
5) Depending on installation position, T1 or T2 must be connected (see also page 187)
O= Open, must be connected (closed on delivery)
X = Closed (in normal operation)

规格尺寸Dimensions, Size 95

在完成最终设计之前，请索取经审核的图纸。尺寸以 mm 为单位。
Before finalizing your design, please request a certified drawing. Dimensions in mm.

LRDS

带有压力切断 D 和负载感应控制 S 的功率控制 LR
Power control LR with pressure cut-off D and load sensing control S

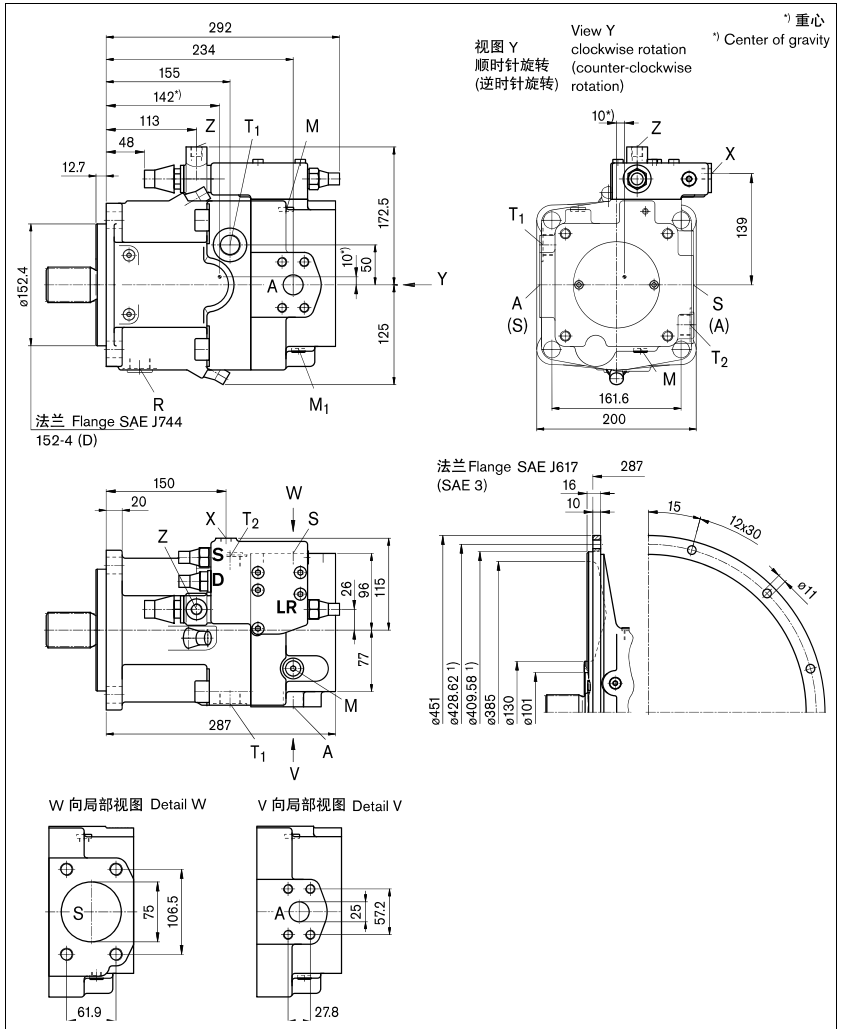

1) 符合 SAE J617-No. 3 的尺寸，用于连接至内燃机的飞轮壳体
1) Dimensions according to SAE J617-No. 3, for connection to the flywheel case of the combustion engine

LA11VO 轴向柱塞变量泵
Axial piston variable pump

规格尺寸 Dimensions, Size 95

在完成最终设计之前，请索取经审核的图纸。
尺寸以 mm 为单位。
Before finalizing your design, please request a certified drawing. Dimensions in mm.

轴端 Shaft ends

Z 符合 DIN 5480 的花键轴
Splined shaft DIN 5480
W45x2x30x21x9g

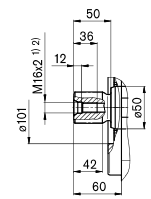

P 符合 DIN 6885 的平键轴 –
Parallel keyed shaft DIN 6885 –
AS14x9x80

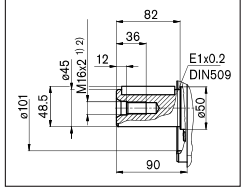

S 花键轴 SAE J744
Splined shaft SAE J744
1 3/4 in，13T 8/16DP 3)

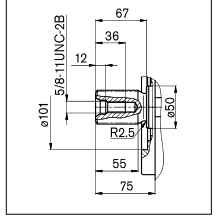

油口 Ports

名称 Designation	函数 Function	标准 Standard	规格 2) Size 2)		最大压力(bar) 4) Max. pressure (bar) 4)	状态 State
A	工作管路油口固定螺纹 Service line port Fixing thread	SAE J518 DIN 13	1 in M12x1.75；	17 (深 deep)	400	O
S	吸油口固定螺纹 Suction port Fixing thread	SAE J518 DIN 13	3 in M16x2；	24 (深 deep)	30	O
T_1、T_2	回油口 Tank port	DIN 3852	M26x1.5；	16 (深 deep)	10	5)
R	排气口 Air bleed	DIN 3852	M26x1.5；	16 (深 deep)	10	X
M_1	测量点，定位腔体 Measurement point, positioning chamber	DIN 3852	M12x1.5；	12 (深 deep)	400	X
M	测量点，工作管路油口 Measurement point, service line port	DIN 3852	M12x1.5；	12 (深 deep)	400	X
X	先导压力油口 在带有负载感应 (S) 和远程控制压力切断 (G) 的型号中 Pilot pressure port in version with load sensing (S) and remote controlled pressure cut-off (G)	DIN 3852	M14x1.5	12 (深 deep)	400	O
Y	先导压力油口 在带有行程限位器 (H...)、2 级压力切断 (E) 和 HD 的型号中 Pilot pressure port in version with stroke limiter (H...), 2-stage pressure cut-off (E) and HD	DIN 3852	M14x1.5；	12 (深 deep)	40	O
Z	先导压力油口 在带有交叉感应 (C) 和 功率越权控制 (LR3) 功率越权控制 (LG1) 的型号中 Pilot pressure port in version with cross sensing (C) and power override (LR3) power override (LG1)	DIN 3852	M14x1.5；	12 (深 deep)	400 40	O
G	控制压力 (控制器) 油口 在带有行程限位器 (H.., U2)、带有螺纹管接头 GE10 - PLM 的 HD 和 EP 的型号中 (否则关闭) Port for control pressure (controller) in version with stroke limiter (H.., U2), HD and EP with screw union GE10 - PLM (otherwise closed)	DIN 3852	M14x1.5；	12 (深 deep)	40	O

1) 符合 DIN 332 标准的中心孔 (符合 DIN 13 标准的螺纹)
2) 有关最大紧固扭矩，具体情况请参见第187页上的一般说明
3) ANSI B92.1a-1976，30° 压力角，平齿根，侧面配合，公差等级 5
4) 根据调节数据和工作压力
5) 根据安装位置的不同，必须连接 T1 或 T2 (另见第 187 页)
O= 打开，必须连接 (交付时已堵上)
X = 关闭 在正常运行中

1) Center bore according to DIN 332 (thread acc. to DIN 13)
2) For max. tightening torque, please refer to general notes on page 187
3) ANSI B92.1a-1976, 30° pressure angle, flat root, side fit, tolerance class 5
4) Depending on adjustment data and operating pressure
5) Depending on installation position, T1 or T2 must be connected (see also page 187)
O= Open, must be connected (closed on delivery)
X = Closed (in normal operation)

LA11VO 轴向柱塞变量泵
Axial piston variable pump

规格尺寸 Dimensions, Size 130/145

在完成最终设计之前，请索取经审核的图纸。
尺寸以 mm 为单位。
Before finalizing your design, please request a certified drawing. Dimensions in mm.

LRDS

带有压力切断 D 和负载感应控制 S 的功率控制 LR
Power control LR with pressure cut-off D and load sensing control S

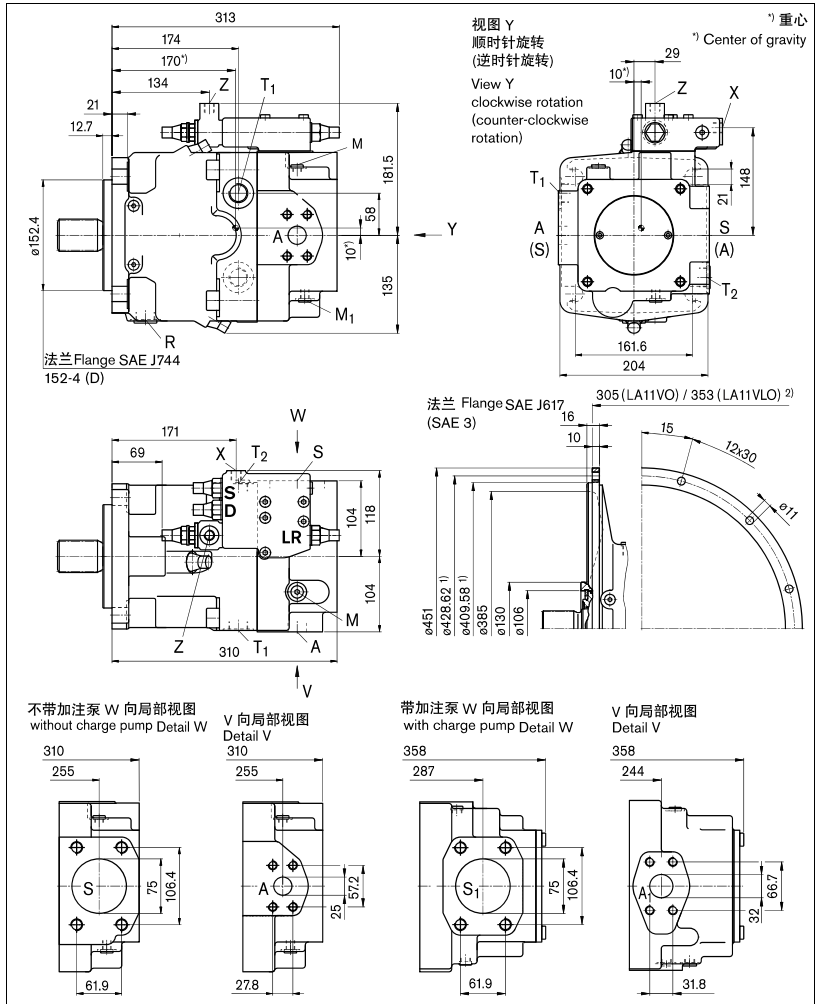

1) 符合 SAE J617-No. 3 的尺寸，用于连接至内燃机的飞轮壳体
2) 带有法兰 SAE 3 的壳体或长度尺寸比标准壳体短 5 mm。

1) Dimensions according to SAE J617-No. 3, for connection to the flywheel case of the combustion engine
2) The case or length dimension with flange SAE 3 is 5 mm shorter than the standard case.

LA11VO 轴向柱塞变量泵
Axial piston variable pump

规格尺寸Dimensions, Size 130/145

在完成最终设计之前，请索取经审核的图纸。
尺寸以 mm 为单位。
Before finalizing your design, please request a certified drawing. Dimensions in mm.

轴端 Shaft ends

Z 符合 DIN 5480 的花键轴
Splined shaft DIN 5480
W50x2x30x24x9g

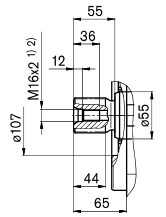

P 符合 DIN 6885 的平键轴
Parallel keyed shaft DIN 6885,
AS14x9x80

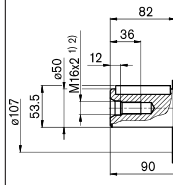

S 花键轴 SAE J744
Splined shaft SAE J744
1 3/4 in，13T 8/16DP 3)

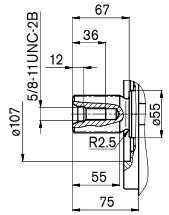

油口 Ports

名称 Designation	函数 Function	标准 Standard	规格 2) Size 2)	最大压力(bar) 4) Max. pressure (bar) 4)	状态 State
A	工作管路油口 Service line port 固定螺纹 Fixing thread	SAE J518 DIN 13	1 in M12x1.75；	17 (深 deep) 400	O
A_1	工作管路油口 Service line port 固定螺纹 Fixing thread	SAE J518 DIN 13	1 1/4 in M14x2；	19 (深 deep) 400	O
S，S_1	吸油口 Suction port 固定螺纹 Fixing thread	SAE J518 DIN 13	3 in M16x2；	24 (深 deep) 30 2 6)	O
T_1、T_2	回油口 Tank port	DIN 3852	M26x1.5；	16 (深 deep) 10	5)
R	排气口 Air bleed	DIN 3852	M26x1.5；	16 (深 deep) 10	X
M_1	测量点，定位腔体 Measurement point, positioning chamber	DIN 3852	M12x1.5；	12 (深 deep) 400	X
M	测量点，工作管路油口 Measurement point, service line port	DIN 3852	M12x1.5；	12 (深 deep) 400	X
X	先导压力油口 在带有负载感应 (S) 和远程控制压力切断 (G) 的型号中 Pilot pressure port in version with load sensing (S) and remote controlled pressure cut-off (G)	DIN 3852	M14x1.5	12 (深 deep) 400	O
Y	先导压力油口 在带有行程限位器 (H...)、2 级压力切断 (E) 和 HD 的型号中 Pilot pressure port in version with stroke limiter (H...), 2-stage pressure cut-off (E) and HD	DIN 3852	M14x1.5；	12 (深 deep) 40	O
Z	先导压力油口 在带有交叉感应 (C) 和功率越权控制 (LR3) 功率越权控制 (LG1) 的型号中 Pilot pressure port in version with cross sensing (C) and power override (LR3) power override (LG1)	DIN 3852	M14x1.5；	12 (深 deep) 400 40	O
G	控制压力 (控制器) 油口 在带有行程限位器 (H.., U2)、带有螺纹管接头 GE10 – PLM 的 HD 和 EP 的型号中 (否则关闭) Port for control pressure (controller) in version with stroke limiter (H.., U2), HD and EP with screw union GE10 - PLM (otherwise closed)	DIN 3852	M14x1.5；	12 (深 deep) 40	O

1) 符合 DIN 332 标准的中心孔 (符合 DIN 13 标准的螺纹)
2) 有关最大紧固扭矩，具体情况请参见第187页上的一般说明
3) ANSI B92.1a-1976，30° 压力角，平齿根，侧面配合，公差等级 5
4) 根据调节数据和工作压力
5) 根据安装位置的不同，必须连接 T1 或 T2 (另见第187页)
6) 带加注泵
O＝打开，必须连接 (交付时已堵上)
X＝关闭 (在正常运行中)

1) Center bore according to DIN 332 (thread acc. to DIN 13)
2) For max. tightening torque, please refer to general notes on page 187
3) ANSI B92.1a-1976, 30° pressure angle, flat root, side fit, tolerance class 5
4) Depending on adjustment data and operating pressure
5) Depending on installation position, T1 or T2 must be connected (see also page 187)
6) with charge pump
O＝Open, must be connected (closed on delivery)
X＝Closed (in normal operation)

LA11VO 轴向柱塞变量泵
Axial piston variable pump

规格尺寸 Dimensions, Size 190

在完成最终设计之前，请索取经审核的图纸。
尺寸以 mm 为单位。
Before finalizing your design, please request a certified drawing. Dimensions in mm.

LRDS

带有压力切断 D 和负载感应控制 S 的功率控制 LR
Power control LR with pressure cut-off D and load sensing control S

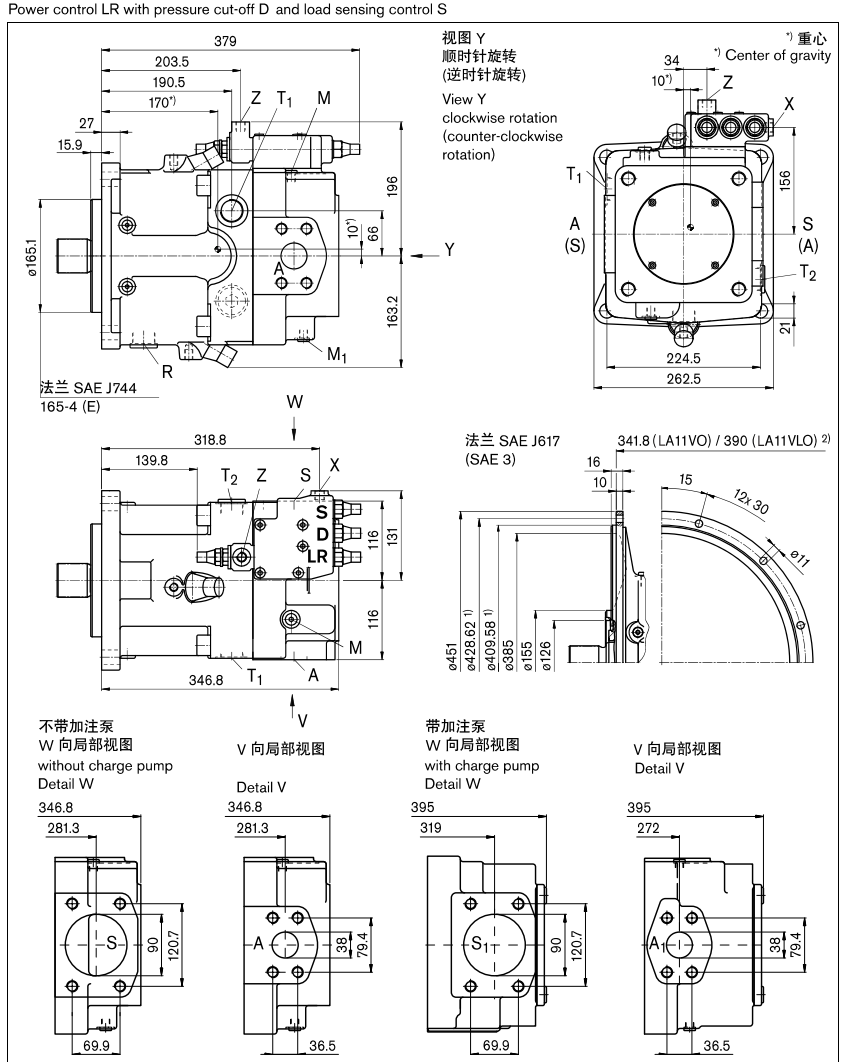

1) 符合 SAE J617-No. 3 的尺寸，用于连接至内燃机的飞轮壳体
2) 带有法兰 SAE 3 的壳体或长度尺寸比标准壳体短 5 mm。

1) Dimensions according to SAE J617-No. 3, for connection to the flywheel case of the combustion engine
2) The case or length dimension with flange SAE 3 is 5 mm shorter than the standard case.

LA11VO 轴向柱塞变量泵
Axial piston variable pump

规格尺寸 Dimensions, Size 190

在完成最终设计之前，请索取经审核的图纸。
尺寸以 mm 为单位。
Before finalizing your design, please request a certified drawing. Dimensions in mm.

轴端 Shaft ends

Z 符合 DIN 5480 的花键轴
Splined shaft DIN 5480
W50x2x30x24x9g

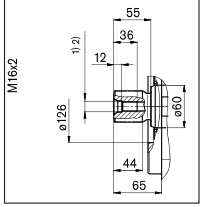

P 符合 DIN 6885 的平键轴，
Parallel keyed shaft DIN 6885,
AS16x10x100

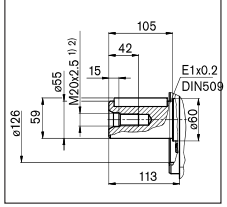

S 花键轴 SAE J744
Splined shaft SAE J744
1 3/4 in，13T 8/16DP 3)

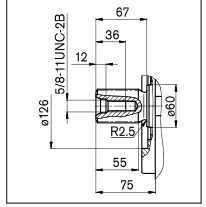

T 花键轴 SAE J744
Splined shaft SAE J744
2 in，15T 8/16DP 3)

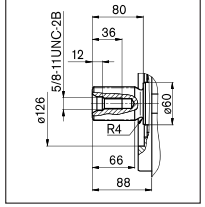

油口 Ports

名称 Designation	函数 Function	标准 Standard	规格 2) Size2)		最大压力 Max. pres- (bar) 4)	状态 State
A，A_1	工作管路油口 Service line port 固定螺纹 Fixing thread	SAE J518 DIN 13	1 1/2 in M16x2；	21 (深 deep)	400	O
S，S_1	吸油口 Suction port 固定螺纹 Fixing thread	SAE J518 DIN 13	3 1/2 in M16x2；	24 (深 deep)	30 2 6)	O
T_1、T_2	回油口 Tank port	DIN 3852	M33x2；	18 (深 deep)	10	5)
R	排气口 Air bleed	DIN 3852	M33x2；	18 (深 deep)	10	X
M_1	测量点，定位腔体 Measurement point, positioning chamber	DIN 3852	M12x1.5；	12 (深 deep)	400	X
M	测量点，工作管路油口 Measurement point, service line port	DIN 3852	M12x1.5；	12 (深 deep)	400	X
X	先导压力油口 在带有负载感应 (S) 和远程控制压力切断 (G) 的型号中 Pilot pressure port in version with load sensing (S) and remote controlled pressure cut-off (G)	DIN 3852	M14x1.5	12 (深 deep)	400	O
Y	先导压力油口 在带有行程限位器 (H...)、2 级压力切断 (E) 和 HD 的型号中 Pilot pressure port in version with stroke limiter (H...), 2-stage pressure cut-off (E) and HD	DIN 3852	M14x1.5；	12 (深 deep)	40	O
Z	先导压力油口 在带有交叉感应 (C) 和 功率越权控制 (LR3) 功率越权控制 (LG1) 的型号中 Pilot pressure port in version with cross sensing (C) and power override (LR3) power override (LG1)	DIN 3852	M14x1.5；	12 (深 deep)	 400 40	O
G	控制压力 (控制器) 油口 在带有行程限位器 (H.., U2)、带有螺纹管接头 GE10 - PLM 的 HD 和 EP 的型号中 (否则关闭) Port for control pressure (controller) in version with stroke limiter (H.., U2), HD and EP with screw union GE10 - PLM (otherwise closed)	DIN 3852	M14x1.5；	12 (深 deep)	40	O

1) 符合 DIN 332 标准的中心孔 (符合 DIN 13 标准的螺纹)
2) 有关最大紧固扭矩，具体情况请参见第187页上的一般说明
3) ANSI B92.1a-1976，30° 压力角，平齿根，侧面配合，公差等级 5
4) 根据调节数据和工作压力
5) 根据安装位置的不同，必须连接 T1 或 T2 (另见第187页)
6) 带加注泵
O＝打开，必须连接 (交付时已堵上)
X ＝关闭 (在正常运行中)

1) Center bore according to DIN 332 (thread acc. to DIN 13)
2) For max. tightening torque, please refer to general notes on page 187
3) ANSI B92.1a-1976, 30° pressure angle, flat root, side fit, tolerance class 5
4) Depending on adjustment data and operating pressure
5) Depending on installation position, T1 or T2 must be connected (see also page 187)
6) with charge pump
O＝Open, must be connected (closed on delivery)
X ＝Closed (in normal operation)

LA11VO 轴向柱塞变量泵
Axial piston variable pump

规格尺寸 Dimensions, Size 260

在完成最终设计之前，请索取经审核的图纸。
尺寸以 mm 为单位。
Before finalizing your design, please request a certified drawing. Dimensions in mm.

LRDS

带有压力切断 D 和负载感应控制 S 的功率控制 LR
Power control LR with pressure cut-off D and load sensing control S

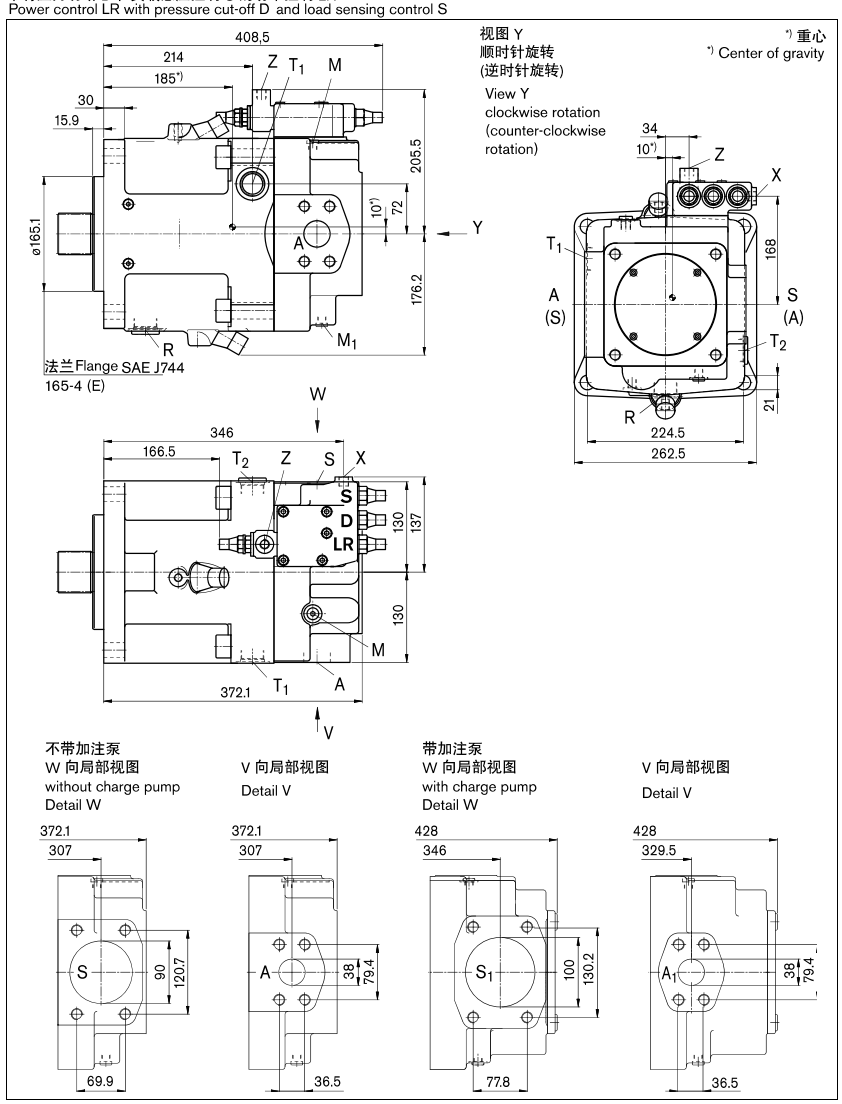

LA11VO 轴向柱塞变量泵
Axial piston variable pump

规格尺寸 Dimensions, Size 260

尺寸以 mm 为单位。

Before finalizing your design, please request a certified drawing. Dimensions in mm.

轴端 Shaft ends

Z 符合 DIN 5480 的花键轴

W60x2x30x28x9g

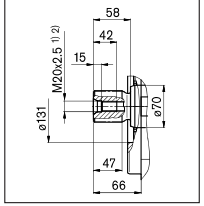

P 符合 DIN 6885 的平键轴

AS18x11x100

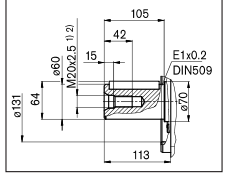

S 花键轴 SAE J744

1 3/4 in，13T 8/16DP 3)

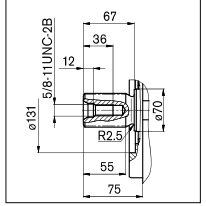

T 花键轴 SAE J744

2 1/4 in，17T 8/16DP 3)

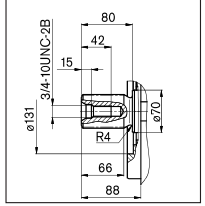

油口 Ports

名称 Designation	函数 Function		标准 Standard	规格 2) Size2)		最大压力 Max. pressure (bar) 4)	状态 State
A，A_1	工作管路油口 固定螺纹	Service line port Fixing thread	SAE J518 DIN 13	1 1/2 in M16x2；	21 (深 deep)	400	O
S	吸油口 固定螺纹	Suction port Fixing thread	SAE J518 DIN 13	3 1/2 in M16x2；	24 (深 deep)	30	O
S_1	吸油口 固定螺纹	Suction port Fixing thread	SAE J518 DIN 13	4 in M16x2；	21 (深 deep)	2 6)	O
T_1、T_2	回油口	Tank port	DIN 3852	M33x2；	16 (深 deep)	10	5)
R	排气口	Air bleed	DIN 3852	M33x2；	16 (深 deep)	10	X
M_1	测量点，定位腔体 Measurement point, positioning chamber		DIN 3852	M12x1.5；	12 (深 deep)	400	X
M	测量点，工作管路油口 Measurement point, service line port		DIN 3852	M12x1.5；	12 (深 deep)	400	X
X	先导压力油口 在带有负载感应 (S) 和远程控制压力切断 (G) 的型号中 Pilot pressure port in version with stroke limiter (H...), 2-stage pressure cut-off (E) and HD		DIN 3852	M14x1.5	12 (深 deep)	400	O
Y	先导压力油口 在带有行程限位器 (H...)、2 级压力切断 (E) 和 HD 的型号中 Pilot pressure port in version with load sensing (S) and remote controlled pressure cut-off (G)		DIN 3852	M14x1.5；	12 (深 deep)	40	O
Z	先导压力油口 在带有交叉感应 (C) 和 功率越权控制 (LR3) 功率越权控制 (LG1) 的型号中 Pilot pressure port in version with cross sensing (C) and power override (LR3) power override (LG1)		DIN 3852	M14x1.5；	12 (深 deep)	400 40	O
G	控制压力 (控制器) 油口 在带有行程限位器 (H.., U2)、带有螺纹管接头 GE10 – PLM 的 HD 和 EP 的型号中 (否则关闭) Port for control pressure (controller) in version with stroke limiter (H.., U2), HD and EP with screw union GE10 - PLM (otherwise closed)		DIN 3852	M14x1.5；	12 (深 deep)	40	O

1) 符合 DIN 332 标准的中心孔 (符合 DIN 13 标准的螺纹)
2) 有关最大紧固扭矩，具体情况请参见第 187 页上的一般说明
3) ANSI B92.1a-1976，30° 压力角，平齿根，侧面配合，公差等级 5
4) 根据调节数据和工作压力
5) 根据安装位置的不同，必须连接 T1 或 T2 (另见第 187 页)
6) 带加注泵
O= 打开，必须连接 (交付时已堵上)
X = 关闭 (在正常运行中)

1) Center bore according to DIN 332 (thread acc. to DIN 13)
2) For max. tightening torque, please refer to general notes on page 187
3) ANSI B92.1a-1976, 30° pressure angle, flat root, side fit, tolerance class 5
4) Depending on adjustment data and operating pressure
5) Depending on installation position, T1 or T2 must be connected (see also page 187)
6) with charge pump
O= Open, must be connected (closed on delivery)
X = Closed (in normal operation)

LA11VO 轴向柱塞变量泵
Axial piston variable pump

在完成最终设计之前，请索取经审核的图纸。

通轴驱动尺寸 Through Drive Dimensions

法兰 SAE J744 – 82-2 (A) 用于花键轴的联轴器，符合 ANSI B92.1a-1976
Flange SAE J744 – 82-2 (A) Coupler for splined shaft acc. to ANSI B92.1a-1976

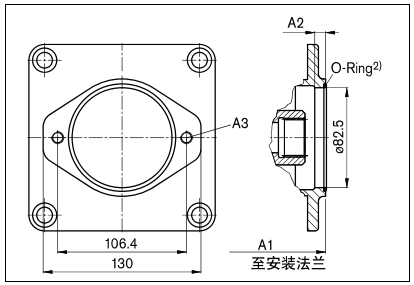

法兰 SAE J744 – 101-2 (B) 用于花键轴的联轴器，符合 ANSI B92.1a-1976
Flange SAE J744 – 101-2 (B) Coupler for splined shaft acc. to ANSI B92.1a-1976
用于花键轴的联轴器，符合 DIN 5480
Coupler for splined shaft acc. to DIN 5480

5/8 in，9T 16/32 DP1) (SAE J744 – 16-4 (A)) **K01**
3/4 in，11T 16/32 DP1) (SAE J744 – 19-4 (A-B)) **K52**

规格 Size	A1 K01	A1 K52	A2	A3 3)
40	240	240	8	M10x1.5；15 (深 deep)
60	257	257	–	M10x1.5；15 (深 deep)
75	275	275	–	M10x1.5；15 (深 deep)
95	306	306	–	M10x1.5；12.5 (深 deep)
130/145	329	329	–	M10x1.5；12.5 (深 deep)
130/145*	363	363	–	M10x1.5；12.5 (深 deep)
190	359.8	359.8	–	M10x1.5；13 (深 deep)
190*	394	394	–	M10x1.5；13 (深 deep)
260	385	385	–	M10x1.5；13 (深 deep)
260*	427.3	427.3	–	M10x1.5；13 (深 deep)

*) 带有加注泵的型号
*) Version with charge pump

规格 40 和 145 上的孔样式
Hole pattern on size 40 and 145

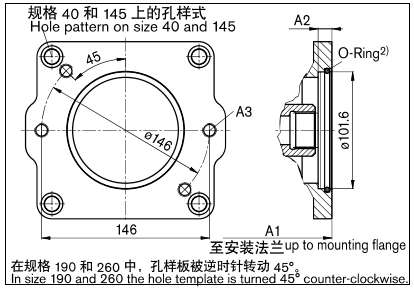

在规格 190 和 260 中，孔样板被逆时针转动 45°。
In size 190 and 260 the hole template is turned 45° counter-clockwise.

法兰 SAE J744 – 127-2 (C) 用于花键轴的联轴器，符合 ANSI B92.1a-1976
Flange SAE J744 – 127-2 (C) Coupler for splined shaft acc. to ANSI B92.1a-1976
用于花键轴的联轴器，符合 DIN 5480
Coupler for splined shaft acc. to DIN 5480

7/8 in，13T 16/32 DP1) (SAE J744 – 22-4 (B)) **K02**
1 in，15T 16/32 DP1) (SAE J744 – 25-4 (B-B)) **K04**
W35x2x30x16x9g **K79**

规格 Size	A1 K02	A1 K04	A1 K79	A2	A3 3)
40	244	244		10	M12x1.75；19 (深 deep)
60	261	261	261	10	M12x1.75；19 (深 deep)
75	279	279		10	M12x1.75；19 (深 deep)
95	303	303	303	10	M12x1.75；16 (深 deep)
130/145	326	326	326	10	M12x1.75；16 (深 deep)
130/145*	360	360	360	10	M12x1.75；16 (深 deep)
190	371.8	369.8	361.8	–	M12x1.75；15 (深 deep)
190*	404	404	394	–	M12x1.75；15 (深 deep)
260	395	395	395	–	M12x1.75；15 (深 deep)
260*	437.5	437.5	437.5	–	M12x1.75；15 (深 deep)

*) 带有加注泵的型号 *) Version with charge pump

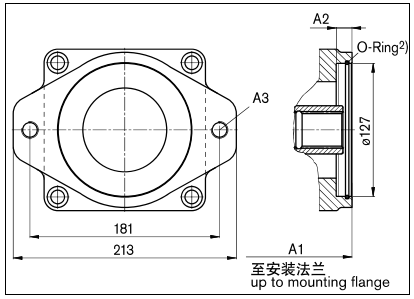

1 1/4 in，14T 12/24 DP1) (SAE J744 – 32-4 (C)) **K07**
1 1/2 in，17T 12/24 DP1) (SAE J744 – 38-4 (C-C)) **K24**
W30x2x30x14x9g **K80**
W35x2x30x16x9g **K61**

规格 Size	A1 K07	A1 K24	A1 K80	A1 K61	A2	A3 3)
60	272	–	265	265	13	M16x2；20 (深 deep)
75	290	–	283	283	13	M16x2；20 (深 deep)
95	318	318	318	318	13	M16x2；16 (深 deep)
130/145	330	330	330	330	13	M16x2；20 (深 deep)
130/145*	364	364	364	364	13	M16x2；20 (深 deep)

*) 带有加注泵的型号
*) Version with charge pump

注意：
安装法兰可以转动 90°。标准位置如图所示。如果需要请以明文形式注明。

1) 30° 压力角，平齿根，侧面配合，公差等级 5
2) O 形环，包含在交货范围内
3) DIN 13，有关最大紧固扭矩，具体情况请参见第 187 页上的一般说明

Note:
The mounting flange may be turned through 90°. Standard position as illustrated. Please state in clear text if required.
1) 30° pressure angle, flat root, side fit, tolerance class 5
2) O-ring included in the delivery contents
3) DIN 13, for max. tightening torque, please refer to general notes on page 187

通轴驱动尺寸 Through Drive Dimensions

法兰 SAE J744–127-2+4 (A) **花键轴联轴器**，符合 ANSI B92.1a-1976
Flange SAE J744–127-2+4 (A) **Coupler** for splined shaft acc. to ANSI B92.1a-1976
花键轴联轴器，符合 DIN 5480
Coupler for splined shaft acc. to DIN 5480

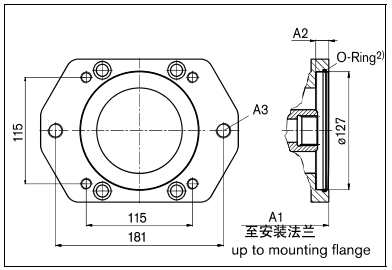

1 1/4 in，14T 12/24 DP[1] (SAE J744 – 32-4 (C)) **K07**
1 1/2 in，17T 12/24 DP[1] (SAE J744 – 38-4 (C-C)) **K24**
W30x2x30x14x9g **K80**
W35x2x30x16x9g **K61**

规格 Size	A1 K07	K24	K80	K61	A2	A3[3]
190	367.8	367.8	367.8	367.8	13	M16x2；19 (深deep)
190*	400	400	400	400	13	M16x2；19 (深deep)
260	391.5	391.5	391.5	391.5	13	M16x2；19 (深deep)
260*	433.5	433.5	433.5	433.5	13	M16x2；19 (深deep)

*) 带有加注泵的型号
*) Version with charge pump

法兰 SAE J744 – 152-4 (D) **花键轴联轴器**，符合 ANSI B92.1a-1976
Flange SAE J744 – 152-4 (D) **Coupler** for splined shaft acc. to ANSI B92.1a-1976
花键轴联轴器，符合 DIN 5480
Coupler for splined shaft acc. to DIN 5480

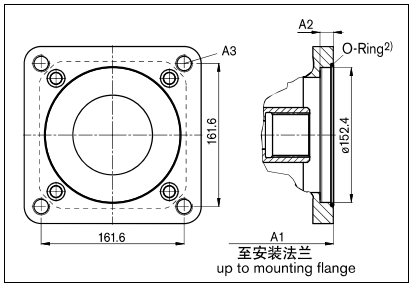

1 1/4 in，14T 12/24 DP[1] (SAE J744 – 32-4 (C)) **K86**
1 3/4 in，13T 8/16 DP[1] (SAE J744 – 44-4 (D)) **K17**
W40x2x30x18x9g **K81**
W45x2x30x21x9g **K82**
W50x2x30x24x9g **K83**

规格 Size	A1 K86	K17	K81	K82	K83	A2	A3[3]
75	290	–	290	–	–	13	M20x2.5；28 (深deep)
95	317	327	317	317	–	30	M20x2.5；25 (深deep)
130/145	340	350	340	340	340	30	M20x2.5；25 (深deep)
130/145*	374	384	374	374	374	30	M20x2.5；25 (深deep)
190	392	392	392	392	392	13	M20x2.5；22 (深deep)
190*	424	424	424	424	424	13	M20x2.5；22 (深deep)
260	417	417	417	417	417	13	M20x2.5；22 (深deep)
260*	459	459	459	459	459	13	M20x2.5；22 (深deep)

*) 带有加注泵的型号
*) Version with charge pump

法兰 SAE J744 – 101-2 (E) **花键轴联轴器**，符合ANSI B92.1a-1976
Flange SAE J744 – 101-2 (E) **Coupler** for splined shaft acc. to ANSI B92.1a-1976
花键轴联轴器，符合 DIN 5480
Coupler for splined shaft acc. to DIN 5480

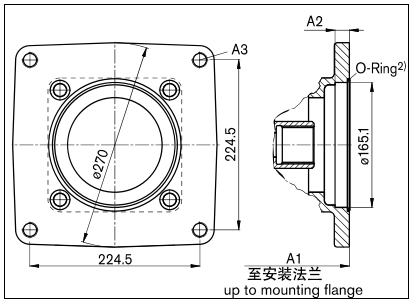

1 3/4 in，13T 16/32 DP[1] (SAE J744 – 32-4 (C)) **K72**
W50x2x30x24x9g) **K84**
W60x2x30x28x9g **K67**

规格 Size	A1 K72	K84	K67	A2	A3[3]
190	376.8	376.8	–	19	M20x2.5；20 (深 deep)
190*	409	409	–	19	M20x2.5；20 (深 deep)
260	417	400	400	19	M20x2.5；20 (深 deep)
260*	459	442.5	442.5	19	M20x2.5；20 (深 deep)

*) 带有加注泵的型号
*) Version with charge pump

注意：
安装法兰可以转动 90°。标准位置如图所示。如果需要请以明文形式注明。
1) 30° 压力角，平齿根，侧面配合，公差等级 5
2) O 形环，包含在交付货物中
3) DIN 13，有关最大紧固扭矩，具体情况请参见第187页上的一般说明

Note:
The mounting flange may be turned through 90°. Standard position as illustrated. Please state in clear text if required.

1) 30° pressure angle, flat root, side fit, tolerance class 5
2) O-ring included in the delivery contents
3) DIN 13, for max. tightening torque, please refer to general notes on page 187

LA11V(L)O 附件概述

Overview of Attachments for LA11V(L)O

通轴驱动 Through drive 法兰 Flange	花键轴联轴器 Coupler for splined shaft	代码 Code	LA11VO 规格（轴） Size (shaft)	LA10V(S)O/31 规格（轴） Size (shaft)	LA10V(S) O/53 规格（轴） Size (shaft)	附件 – 二泵 LA4FO 规格（轴） Size (shaft)	LA4VG 规格（轴） Size (shaft)	规格（轴） Size (shaft)	外啮合齿轮泵 External gear pump	通轴驱动 Through drive 可供货 用于规格 available for size
82-2 (A)	5/8 in	K01	–	18 (U)	10 (U)	–	–	–	机座大小 F 规格 4-22 1) Frame size F Size 4-22	40...260
	3/4 in	K52	–	18 (S)	10 (S)	–	–	–	–	40...260
101-2 (B)	7/8 in	K02	–	28 (S、R) 45 (U)	28 (S、R) 45 (U、W)	16、22、28 (S)	–	18 (S)	机座大小 N 规格 20-32 1) 机座大小 G 规格 38-45 1) Frame size N Size 20-32 1) Frame size G Size 38-45 1)	40...260
	1 in	K04	40 (S)	45 (S、R)	45 (S、R) 60 (U、W)	–	28 (S)	28、45 (S)	–	40...260
	W35	K79	40 (Z)	–	–	–	–	–	–	40...260
127-2 (C)	1 1/4 in	K07	60 (S)	71 (S、R) 100 (U)	60 (S) 2) 85 (U)	–	40、56、71 (S)	63 (S)	–	60...260
	1 1/2 in	K24	–	100 (S)	85 (S)	–	–	–	–	95...260
	W30	K80	–	–	–	–	40、56 (Z)	–	–	60...260
	W35	K61	60 (Z)	–	–	–	40、56 (A) 71 (Z)	–	–	60...260
152-4 (D)	1 1/4 in	K86	75 (S)	–	–	–	–	–	–	75...260
	1 3/4 in	K17	95、130、145 (S)	140 (S)	–	–	90、125 (S)	–	–	130...260
	W40	K81	75 (Z)	–	–	–	125 (Z)	–	–	75...260
	W45	K82	95 (Z)	–	–	–	90、125 (A)	–	–	95...260
	W50	K83	130、145 (Z)	–	–	–	–	–	–	130...260
165-4 (E)	1 3/4 in	K72	190、260 (S)	–	–	–	180、250 (S)	–	–	190...260
	W50	K84	190 (Z)	–	–	–	180 (Z)	–	–	190...260
	W60	K67	260 (Z)	–	–	–	–	–	–	260

1) 力盛推荐特殊型号齿轮泵。具体情况请咨询。
2) 仅带有 4 孔安装法兰的 LA10VO 可以安装至 LA11V(L)O 190 和 260。

1) Lixon recommends special versions of the gear pumps. Please ask.
2) Only LA10VO with 4-hole mounting flange can be mounted to LA11V(L)O 190 and 260.

组合泵 LA11VO+LA11VO Combination Pumps LA11VO +LA11VO

总长度 A [1]) Total length A [1])

LA11VO	二泵 2nd pump									
一泵 1st pump	规格 40 Size 40	规格 60 Size 60	规格 75 Size 75	规格 95 Size 95	规格 130/145 Size 130/145	规格 130/145 [2]) Size 130/145 [2])	规格 190 Size 190	规格 190 [2]) Size 190 [2])	规格 260 Size 260	规格 260 [2]) Size 260 [2])
规格40 Size 40	–	–	–	–	–	–	–	–	–	–
规格60 Size 60	490	507	–	–	–	–	–	–	–	–
规格75 Size 75	–	525	550	–	–	–	–	–	–	–
规格95 Size 95	528	560	577	604	–	–	–	–	–	–
规格130/145 Size 130/145	551	572	600	627	650	698	–	–	–	–
规格130/145 [2]) Size 130/145 [2])	585	606	634	661	684	732	–	–	–	–
规格190 Size 190	586.8	609.8	652	679	702	750	723.6	772.3	–	–
规格190 [2]) Size 190[2])	619	642	684	711	734	782	755.8	804.5	–	–
规格260 Size 260	620	633.5	677	704	727	775	746.8	795.5	772	828
规格260 [2]) Size 260 [2])	662.5	675.5	719	746	769	817	789.3	838	814.5	870.5

[1]) 当使用用于连接泵 (二泵) 的 Z 轴 (花键轴 DIN 5480) 时
[2]) 带有加注泵的型号

[1]) When using the Z shaft (splined shaft DIN 5480) for the attached pump (2nd pump)
[2]) Version with charge pump

当订购组合泵时，
一泵和二泵的型号名称必须用“+”连接。
一泵订货代码 + 二泵订货代码

订货示例：
LA11VO130LRDS/10R-NZD12K61+LA11VO60LRDS/10R-NZC12NOO

When ordering combination pumps, the type designations of the 1st and 2nd pumps must be connected by a "+".
Ordering code 1st pump + Ordering code 2nd pump

Ordering example:
LA11VO130LRDS/10R-NZD12K61+LA11VO60LRDS/10R-NZC12NOO

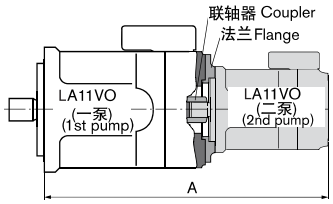

电磁铁插头 Connector for Solenoids

DEUTSCH DT04-2P-EP04，2 针 DEUTSCH DT04-2P-EP04, 2-pin

模压，不带双向镇流器二极管 (标准) _____ **P**
molded, without bidirectional suppressor diode (standard)

符合 DIN/EN 60529 规定的防护类型：IP67 和 IP69K
Type of protection according to DIN/EN 60529: IP67 and IP69K

油路符号 Circuit diagram symbol

不带双向镇流器二极管 **without** bidirectional suppressor diode

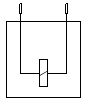

匹配插头 Mating connector

DEUTSCH DT06-2S-EP04

包括：Consisting of:

	DT 名称 DT designation
– 1 个壳体 case	DT06-2S-EP04
– 1 个楔 wedge	W2S
– 2 个内螺纹插头female connectors	0462-201-16141

交付内容中不包括配合插头。这可按要求由力盛供货。
The mating connector is not included in the delivery contents.
This can be delivered by Lixon on request.

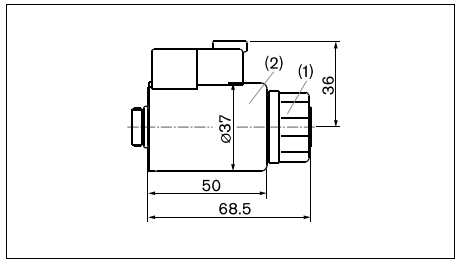

电磁铁插头的注意事项：

插头的位置可通过转动电磁铁本体进行更改。

按以下方式操作：

– 1. 松开固定螺母 (1)
– 2. 将电磁铁本体 (2) 转动到所需位置。
– 3. 紧固固定螺母
固定螺母的紧固扭矩：5^{+1} Nm
(平面宽度 WAF 26，12kt DIN 3124)

Note for round solenoids:

The position of the connector can be changed by turning the solenoid body.

Proceed as follows:

– 1. Loosen fixing nut (1)
– 2. Turn the solenoid body (2) to the desired position.
– 3. Tighten the fixing nut
Tightening torque of fixing nut: 5^{+1} Nm
(width across the flats WAF 26, 12kt DIN 3124)

摆动角指示器 Swivel Angle Indicator

光学摆动角指示器 Optical swivel angle indicator, V

对于光学摆动角指示器，泵壳体侧面的机械指针指示泵摆动角的位置。

With the optical swivel angle indicator, a mechanical pointer on the side of the pump case displays the position of the swivel angle of the pump.

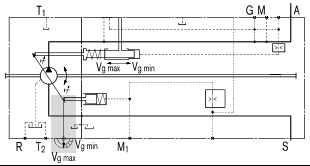

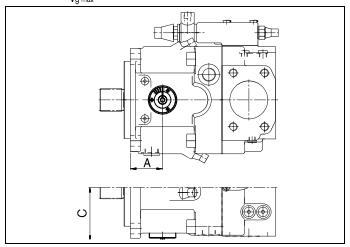

规格 Size	A	C
40	50.5	84.0
60	不可供货 not available	
75	60.7	97.0
95	63,5	104.0
130	70.9	112.0
190	87.6	123.5
260	87.6	137.0

电子斜盘倾角传感器 Electric swivel angle sensor, R

对于电子摆动角指示器，泵的摆动位置通过电子斜盘倾角传感器测量。它有一个坚固的、密封的壳体和集成电子元件，专为车辆应用而设计。

作为输出，霍尔效应斜盘倾角传感器提供与摆动角成比例的电压信号 (参见技术参数)。

With the electric swivel angle indicator the swivel position of the pump is measured by an electric swivel angle sensor. It has a robust, sealed case and integrated electronics designed for automotive applications.

As an output the Hall effect swivel angle sensor supplies a voltage signal proportional to the swivel angle (see technical parameters).

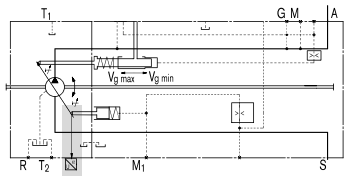

参数 Parameters		
电源电压 U_b Supply voltage U_b	10...30 V DC	
输出电压 U_a Output voltage U_a	2.5 V ($V_{g\,min}$)	4.5 V ($V_{g\,max}$)
反向连接保护 Reverse-connect protection	防短路 Short-circuit-proof	
EMC 稳定性 EMC stability	根据要求提供详细信息 Details on request	
工作温度范围 Operating temperature range	-40 °C...+125 °C	
抗振性 正弦曲线振动 EN 60068-2-6	Vibration resistance Sinusoidal vibration EN 60068-2-6	10 *g* / 5...2000 Hz
抗冲击性：连续冲击 IEC 68-2-29	Shock resistance: Continuous shock IEC 68-2-29	*25 g*
耐盐雾 DIN 50021-SS	Resistance to salt spray DIN 50021-SS	96 小时
防护类型 DIN/EN 60529 Type of protection DIN/EN 60529	IP67 和 IP69K IP67 and IP69K	
外壳材料 Case material	人造材料 synthetic material	

匹配插头 AMP Superseal 1.5；3 插脚，

Mating connector AMP Superseal 1.5; 3-pin,

包括：	AMP 编号
– 1 内螺纹插头壳体，3 插脚	282087-1
– 3 个导线密封体，黄色	281934-2
– 3 个内螺纹插头触点，1.8–3.3 mm	283025-1

交付内容中不包括配合插头。这可按要求由力盛供货。

Consisting of:	AMP no.
– 1 female connector case, 3-pin	282087-1
– 3 single wire seals, yellow	281934-2
– 3 female connector contacts 1.8–3.3 mm	283025-1

The mating connector is not included in the delivery contents. This can be delivered by Lixon on request.

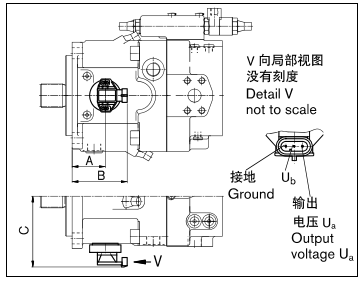

规格 Size	A	B	C
40	50.5	88.5	118.3
60	不可供货 not available		
75	60.7	98.7	131.3
95	63.5	101.5	138.3
130	70.9	108.9	146.3
190	87.6	125.6	157.8
260	87.6	125.6	171.3

安装注意事项 Installation Notes

安全说明 General

在调试和运行过程中，轴向柱塞元件必须始终充满液压油并排放空气。在停用时间相对较长时，也应遵守上述注意事项，因为系统可能通过液压管路排空。

外壳内的壳体泄油必须通过最高油箱油口 (T_1、T_2) 排放到油箱。油口 S 处的最小吸入压力不得降低到 0.8 bar 绝对压力 (不带加注泵) 或 0.6 bar (带有加注泵) 以下。

在所有工况下，吸油管路和壳体泄油管路必须通入油箱中最低油位以下的位置。

During commissioning and operation, the axial piston unit must be filled with hydraulic fluid and air bled. This is also to be observed following a relatively long standstill as the system may empty via the hydraulic lines.

The case drain in the case interior must be directed to the tank via the highest tank port (T_1, T_2). The minimum suction pressure at port S must not fall below 0.8 bar absolute (without charge pump) or 0.6 bar (with charge pump).

In all operational conditions, the suction line and case drain line must flow into the tank below the minimum fluid level.

安装位置

请参见以下示例。其它安装位置可应要求提供。

在油箱下方安装 (标准)

泵低于油箱的最低油位。

建议的安装位置：1 和 2。

Installation position

See examples below. Additional installation positions are available upon request.

Below-tank installation (standard)

Pump below the minimum fluid level of the tank.

Recommended installation positions: 1 and 2.

在油箱上方安装

泵高于油箱的最低油位。

遵守最大允许吸油高度 $h_{s\,max} = 800$ mm。

型号 LA11VLO (带有加注泵) 不是为安装在油箱上方而设计。安装位置 7 建议 (轴朝上)：箱体泄油管路中的单向阀 (开启压力 0.5 bar) 可以防止壳体内部排放。

对于带有压力控制、排量限制器、HD 和 EP 控制的控制选装件，最小排量设置必须为 $V_g \geq 5\%\ V_{g\,max}$。

Above-tank installation

Pump above the minimum fluid level of the tank.

Observe the maximum permissible suction height $h_{s\,max} = 800$ mm.

The version LA11VLO (with charge pump) is not designed for installation above the tank.

Recommendation for installation position 7 (shaft up): A check valve in the case drain line (opening pressure 0.5 bar) can prevent the case interior from draining.

For control options with pressure control, displacement limiters, HD and EP control, the minimum displacement setting must be $V_g \geq 5\%\ V_{g\,max}$.

螺纹尺寸 Thread size		螺纹的最大允许紧固扭矩 M_{Gmax} Max. permissible tightening torque of the screw thread M_{Gmax}	锁紧螺钉所需的紧固扭矩 M_V Required tightening torque for locking screws M_V	WAF 内六角 WAF Hexagon socket
M12x1.5	DIN 3852	50 Nm	25 Nm	6 mm
M14x1.5	DIN 3852	80 Nm	35 Nm	6 mm
M22x1.5	DIN 3852	210 Nm	80 Nm	10 mm
M26x1.5	DIN 3852	230 Nm	120 Nm	12 mm
M33x2	DIN 3852	540 Nm	310 Nm	17 mm

安全说明 General Notes

- LA11VO 泵设计用于开式回路中。
- 轴向柱塞元件的项目规划、组装和调试必须由合格人员进行。
- 工作管路油口和功能油口仅设计用于液压管路。
- 运行期间及运行后不久，轴向柱塞元件 (特别是电磁铁) 可能存在造成灼伤的风险。应采取适当的安全措施 (例如穿着防护服)。
- 根据轴向柱塞元件的不同工作状态 (工作压力、油液温度)，特性可能会改变。
- 压力油口：
  油口和固定螺纹设计用于最大规定压力。机器或系统制造商必须确保连接元件和管路的安全系数满足规定的工作条件 (压力、流量、液压油、温度)。
- 此处包含的数据和说明必须遵循。
- 采用以下紧固扭矩：
  - 轴向柱塞元件的螺纹孔：最大允许紧固扭矩 $M_{G\,max}$ 对于螺纹孔是最大值，不得超过该值。有关数值，请参见下表。
  - 接头：关于所用接头的紧固扭矩，请参见制造商说明。
  - 固定螺钉：有关满足 DIN 13 的固定螺钉，我们建议根据 VDI 2230 对其紧固扭矩进行单独检查。
  - 锁紧螺钉：对于轴向柱塞元件附带提供的金属锁紧螺钉，施加锁紧螺钉所需的紧固扭矩 M_V。有关数值，请参见下表。
- 该产品部件没有按照 DIN EN ISO 13849 的通用机器安全概念进行认证批准。

- The LA11VO pump is designed to be used in open circuits.
- Project planning, assembly and commissioning of the axial piston unit require the involvement of qualified personnel.
- The service line ports and function ports are only designed to accommodate hydraulic lines.
- During and shortly after operation, there is a risk of burns on the axial piston unit and especially on the solenoids. Take appropriate safety measures (e. g. by wearing protective clothing).
- Depending on the operational state of the axial piston unit (operating pressure, fluid temperature), the characteristic may shift.
- Pressure ports:
  The ports and fixing threads are designed for the specified maximum pressure. The machine or system manufacturer must ensure that the connecting elements and lines correspond to the specified operating conditions (pressure, flow, hydraulic fluid, temperature) with the necessary safety factors.
- The data and notes contained herein must be adhered to.
- The following tightening torques apply:
  - Threaded hole for axial piston unit:
    The maximum permissible tightening torques $M_{G\,max}$ are maximum values for the threaded holes and must not be exceeded. For values, see the following table.
  - Fittings: Observe the manufacturer's instruction regarding the tightening torques of the used fittings.
  - Fixing screws:
    For fixing screws according to DIN 13, we recommend checking the tightening torque individually according to VDI 2230.
  - Locking screws:
    For the metal locking screws supplied with the axial piston unit, the required tightening torques of locking screws M_V apply. For values, see the following table.
- The product is not approved as a component for the safety concept of a general machine according to DIN EN ISO 13849.

NVICKS® 威克斯液压 VICKS HYDRAULIC

LA11VO 轴向柱塞变量泵
Axial piston variable pump

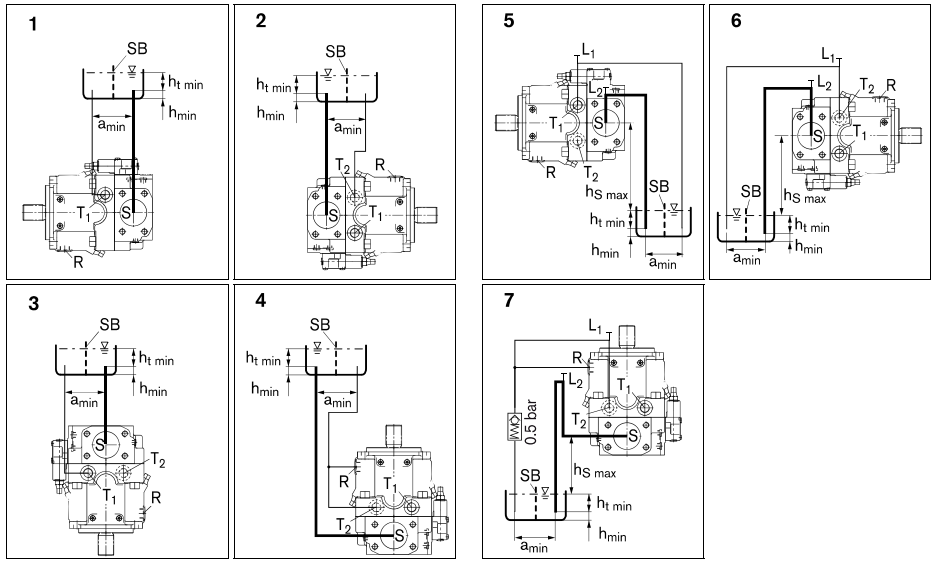

$h_{s\,max}$ = 800 mm、$h_{t\,min}$ = 200 mm、h_{min} = 100 mm、SB = 消声器板 (挡板)

当设计油箱时，确保吸油管路和箱体泄油管路之间有足够的空间 a_{min}，以防经过加热的回流液压油被直接从后面吸出。

$h_{s\,max}$ = 800 mm, $h_{t\,min}$ = 200 mm, h_{min} = 100 mm, SB = Silencer plate (baffle plate)

When designing the tank, ensure adequate space a_{min} between the suction line and the case drain line to prevent the heated, returned fluid from being directly drawn back out.

安装位置 Installation position	排气 Air bleeding	注油 Filling
1	T_1	S + T_1
2	R	S + T_2
3	T_1/T_2	S + T_1/T_2
4	R	S + T_1/T_2

安装位置 Installation position	排气 Air bleeding	注油 Filling
5	$L_1 + L_2$	L_2 (S) + L_1 (T_1)
6	R + L_2	L_2 (S) + L_1 (T_2)
7	$L_1 + L_2$	L_2 (S) + L_1 (T_1/T_2)

LA11VO 轴向柱塞变量泵
Axial piston variable pump

安装注意事项 Installation Notes

油箱安装

泵低于油箱的最低油位。

Tank installation

Pump below the minimum fluid level in the tank.

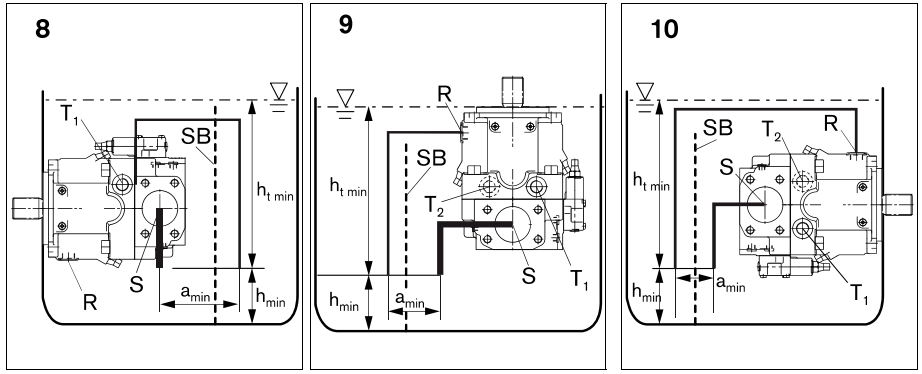

$h_{s\,max}$ = 800 mm、$h_{t\,min}$ = 200 mm、h_{min} = 100 mm、
SB = 消声器板 (挡板)

当设计油箱时，确保吸油管路和箱体泄油管路之间有足够的空间 a_{min}，以防经过加热的返回液压油被直接从后面吸出。

安装位置	排气	注油
8	T_1	通过所有开口 T_1、T_2、R 和 S 油口自动进行，槽位置低于液压油位
9	R	
10	R	

$h_{s\,max}$ = 800 mm, $h_{t\,min}$ = 200 mm, h_{min} = 100 mm,
SB = Silencer plate (baffle plate)

When designing the tank, ensure adequate space a_{min} between the suction line and the case drain line to prevent the heated, returned fluid from being directly drawn back out.

Installation position	Air bleeding	Filling
8	T_1	automatically via all open T_1, T_2, R and S ports, though position below the hyraulic fluid level
9	R	
10	R	

用户须知 User Instructions

油液选择Fluid Choice

(1)为了保证无故障的高效工作，在设计系统期间应根据工况仔细选择液压系统的液压油，所有矿物油均在某种程度上适用于轴向柱塞元件，它们应用时基本划分取决于上述的水，粘度与温度关系，并考虑氧化和腐蚀保护，材料相容性，空气和水分离特性。

(2)为了保证设备有长的使用寿命，必顺进行良好而可靠的过滤。油液中的颗粒污染不得超过以下等级：
等级 18/15—按 GB/T14039-1993
等级6-一按SAE
等级 18/15—按 ISO/DIS4406
在油液温度很高[75°C wt, 490°C时，最低清洁度为：
等级 17/14-一按 GB/T140039-1993
等级5—按SAE
等级 17/14—按 ISO/DIS4406

(3)为了正确选择液压油，必须知道与环境温度有差的工作温度，要求温度不得超过90°C,推荐在工作温度下选择工作粘度为16-36mm²/s的 液压油。可参考如下图表选择液压油的粘度，在每种工况下均选用尽可能高的粘度等级。

In order to ensure the selection of fluid trouble-free and high-performance work, in the systems design period, you should choose the hydraulic fluid of the hydraulic system be based on conditions carefully. All the mineral oil are extent applicable to the axial piston unit, which application of the basic division of the above depends on the relationship of the water, temperature and viscosity, and consider oxidation and consiedr oxidation and corrosion protection, material compatibility, air and water separation properties.

In order to ensure long service life of equipment, must be good and reliable filter, fluid pollution of particles should not exceed the following levels:
Gradel 8/15—in accordance with GB/T 14039-1993
Grade6—in accordance with SAE
Gradel 8/15—in accordance with ISO/DIS4406
Fluid in the high temperature [75°C wt, t . 90°C]
Gradel 7/14—in accordance with GB/T 14039-1993
Grade5—in accordance with SAE
Gradel 7/14—in accordance with ISO/DIS4406

In order to choose the correct hydraulic fluid, you must be aware of the ambient temperature related to the working temperature, the temperature requirements is no more than 90°C, working viscosity is 16—36mm²/s. please refer to the following chart, choose the viscosity of hydraulic fluid, select the highest level of viscosity as possible in each working conditions.

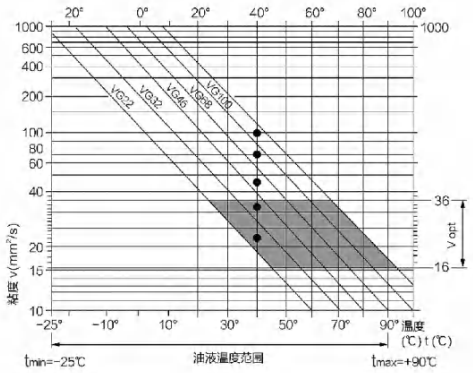

用户须知 User Instructions

油液要求 Oil requirements

本系列轴向柱塞泵的工作用油液推荐采用低凝液压油，抗磨液压油，航空液压油等。正常工作油温为15-65°C,理想工作油温46-54°C。油液在正常工作温度下工作，应保证其运动黏度范围为：16-32mm2/s。油液清洁度控制在NAS 1683 9级(或GB/T14036-1993 18/15)以内。注意：油液清洁度将显著影响油泵寿命！

油泵初始使用一个月或连续使用一段时间后，应重新检查油液清洁度，并更换或清洗滤器。不合格的油液要更换新油。

注：LA4V系列轴向柱塞泵可使用HF难燃油液压油，订货时需订购特殊型号[E-型]。使用HFA, HFB, HFC液压油时，需要减小许用压力和驱动 转速，允许使用压力和转速见下表：

The work this series axial piston pump with hydraulic oil recommended low condensate oil, antiwear hydraulic oil, aviation hydraulic oil and so on. normal working oil temperature is 15-65°C, ideal working oil temperature is 46-54°C fluid in the normal operating temperature to work, should ensure the viscosity of its movement range: 16-36mm² /s. Cleanliness control in NAS 1683 9 level (of GB/T14036-1993 18/15) or less. Note: Oil ceanliness will significantly affect the pump life!

Pump for one month or continuous use of the initial period of time, should be re-check the oil cleanliness, and replace or clean the filter. Oil failed to replace oil.

Note: This series of axial piston pump can be difficult to ues HF fuel oil, hydraulic oil, to be ordered when ordering the special model [E-Type]. Using the HFA, HFB, HFC hydraulic oil, the need to reduce the allowable pressure and driving speed, allows the use of pressure and speed as follows

规格 Size		40	71	125	180	250	355	500
HFA额定压力 Rated pressure 峰值压力 Peak plant stress	14MPa 16MPa	1950	1650	1350	1350	1120	1120	1000
HFB额定压力 Rated pressure 峰值压力 Peak plant stress	14MPa 21MPa	2100	1760	1450	1450	1200	1200	1050
HFC额定压力 Rated pressure 峰值压力 Peak plant stress	25MPa 28MPa	2100	1760	1450	1450	1200	1200	1050

注：转速单位「/min;需要在油口U处冲洗轴承，冲洗油液流量参考泵样本。
Note: The speed unit r/min; need to wash the oil bearing at the port of U, flushing pump oil flow feference samples.

◎在运行时，泵体必须灌满油液，并且在工作时保持充满状态。
◎为了减轻噪声，所有连接管道推荐用柔性元件和油箱隔离。
◎泄露管道需直接回到油箱，泄油压力(壳体内允许的最高力)为0.4MPa (绝对压力)。
◎LA4V在垂直安装时，推荐进行轴承冲洗，保证前轴承和轴封有足够的润滑。可通过靠近变量泵前法兰的油口 U来完成，冲洗油液流过前轴承和泵的 泄漏油口排出。U 口与泄漏油口T保持约0.2MPa压差。各种规格泵所需的冲洗油液流量见下表
◎当液压泵连续在额定压力或间断峰值压力下运行，需采用辅助装置冷却油液，保证油液温度不超过规定范围。
◎运转前应检查柱塞泵安装是否正确可靠，联轴器安装是否合乎要求，用手转动联轴器是否有卡死现象。
◎初次使用或长期存放后运转时，应在启动前按说明书的要求向柱塞泵的壳体内注满清洁的工作油液，否则不准启动，启动前检查原动机的转向，检查 进油管的阀门是否打开。
◎将系统中溢流阀等调节到最低值，严禁带载启动。
◎启动时应先点动，正常工作后再连续运转。在运转一定时间后无异常现象发生，再逐步调节到所需压力和流量。安全溢流阀的最大调节值不应超过规定。注：未按规定使用而造成柱塞泵损坏不在三包范围内

◎When tries the movement, the pump body must be full the with fluid, and maintains the fills condition in work time.
◎To reduce the noise, all connection pipeline isolates with the flexible part and the fuel tank.
◎The divulges pipeline need to return the fuel tank directly, releases pressure (top pressure which the oil pressure in shell permits) is 0.4MPa(absolute pressure)
◎When vertical installs, we recommendation carries on the bearing flushing, ensure that the front bearing and the axis seal have the enough lubrication, we can use approaching the variable displacement pump flange's oil port U to complete, the flushing fluid flows through the front bearing, and discharge to fluid leak port with the leak fluid of pump together. Port U with leak fluid port T maintains approximately the 0.2MPa pressure Gap. Various size pumping station needs the fluid sees the next table
When the hydraulic pump continuously moves under the nominal pressure or the interrupted peak pressure, must using the auxiliary unit to cool fluid, ersure

用户须知 User Instructions

◎That the fluid temperature does not surpass the prescribed limit.
◎Pump should be checked before running the installation is correct and reliable, whether it is required to install the coupling, turn the coupling by hand to see if there is stuck phenomenon.
◎After initial use of long-term storage operation, must be required filled with the work of cleaning fluid before the start .If not ,should not allow to start.Check the direction of the prime mover before starting. Check whether the valve of the oil inlet pipe is open.
◎Adjust the overflow valve in the system to the lowest value, and it is strictly forbidden to start with load.
◎It should be jog start when starting, and then continue to run after normal work. After a certain period of operation, no abnormal phenomenon occurs, and the required pressure and flow are gradually adjusted. The maximum adjustment value of the safety relief valve should not exceed the regulations. Note: Damage to the plunger pump caused by incorrect use is not covered by the warranty.

规格 Size	40	71	125	180	250	355	500
流量Flow：L/min	4	5	6	8	12	16	20

联轴器的安装 Shaft Coupling Installation

1、热安装法：将泵轴配合的联轴器放入w160°C的热油中加热40分钟，待轻松放入泵轴后，用水快速冷却，以免 过热致使主轴密封损坏，造成漏油，冷却后再锁紧平键处紧定螺钉。
2、拉装法：如图1,严禁敲击泵的主轴。
3、A4V系列泵正确的吊装方式如图2所示，严禁吊装油泵主轴！

图1 Picture1

图1 Picture2

1.Heat installation method.
Heating the shaft coupling in hot oil 160° for 40 minutes.Cooling the coupling with cold water so that can avoid the damage of shaft seal overheatd, in order to avoid leakage.Then locking the screw at key section after cooling.
2.Pulling installation method
As picture 1 shows. Do not hit the main shaft!
3.The correct installation method as picture 2 shown above. Do not hang the main shaft.